13.11.2019

W2

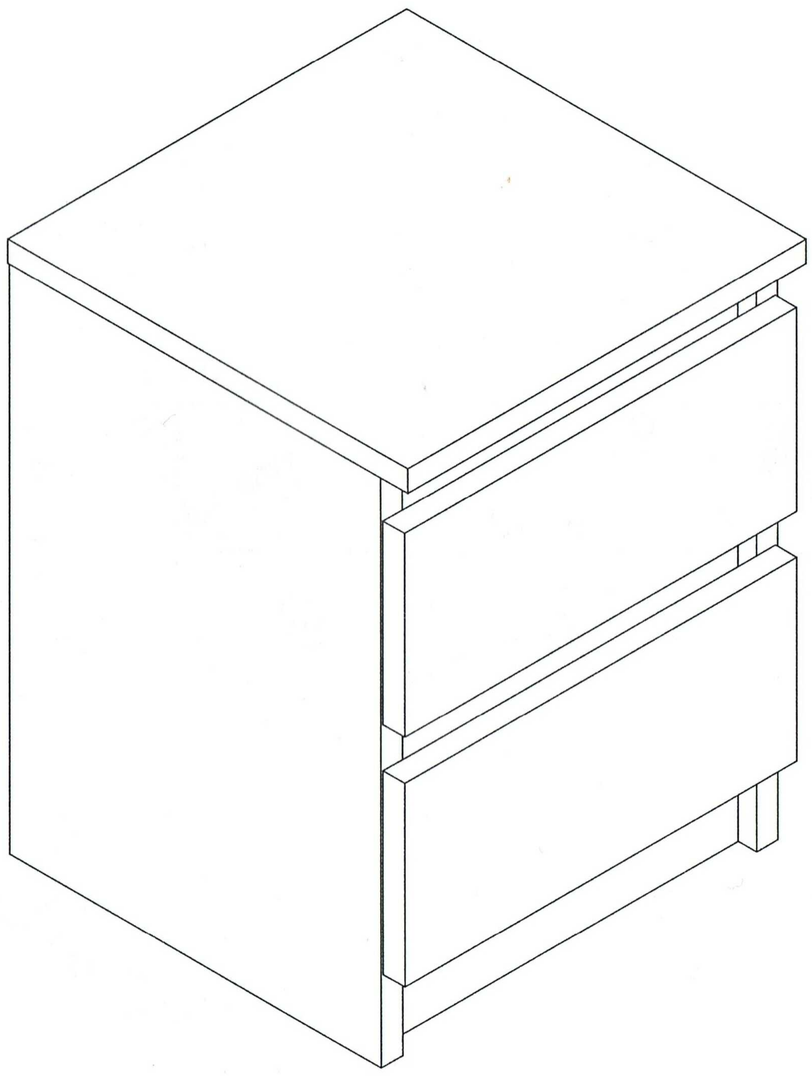

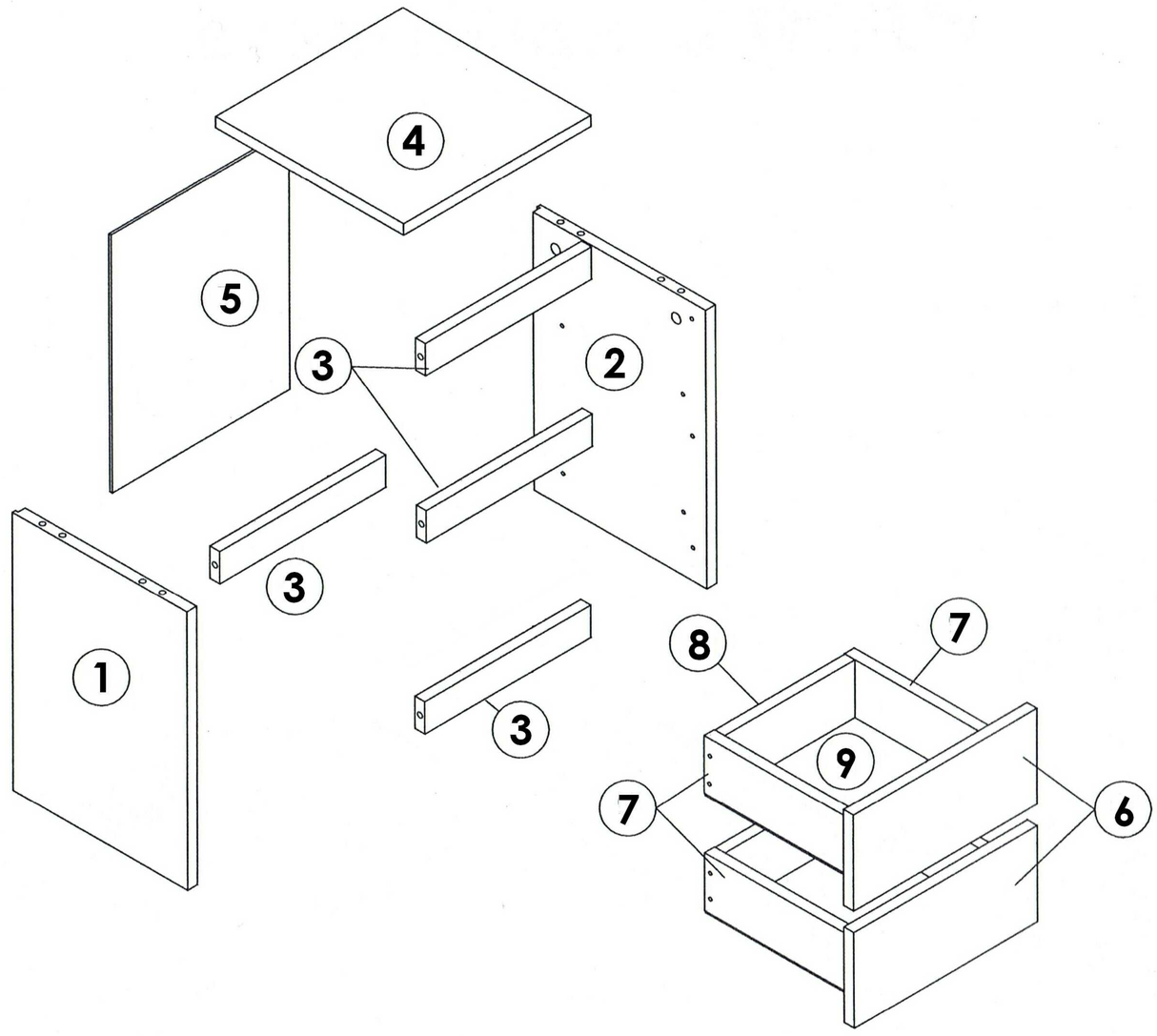

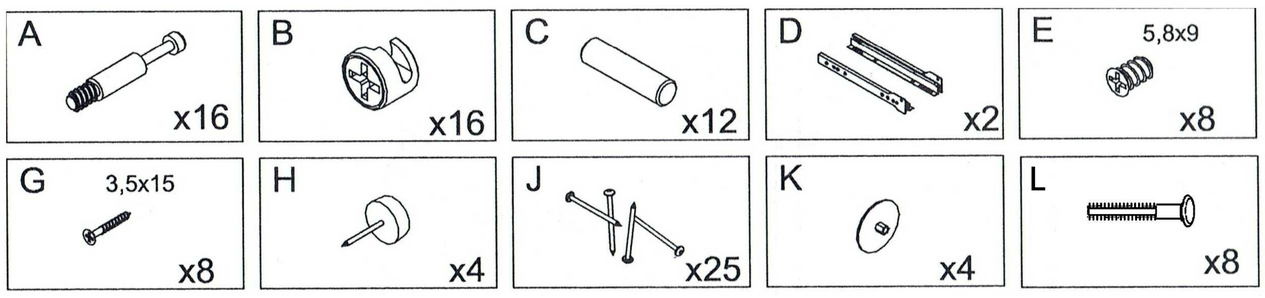

1

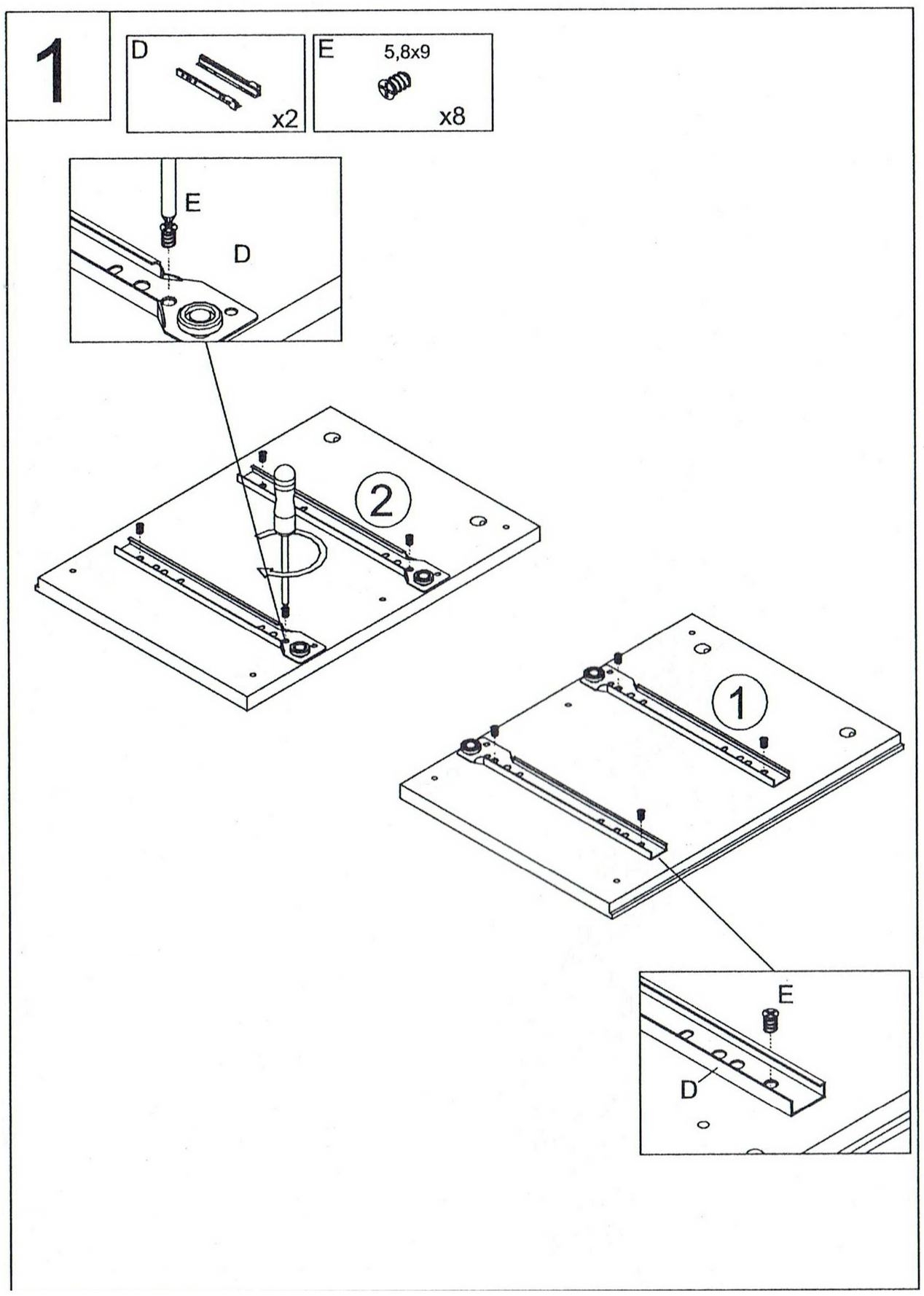

2

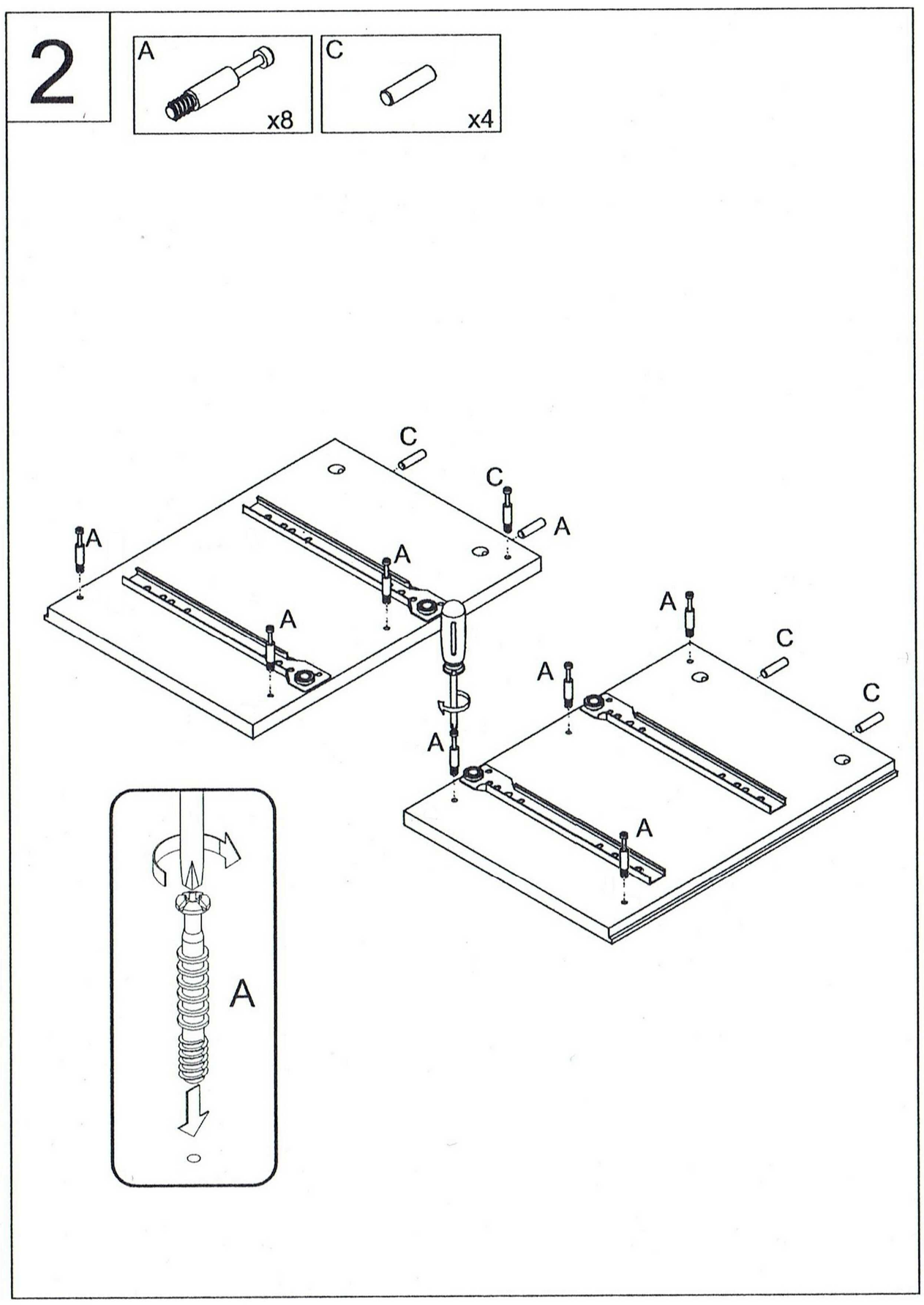

3

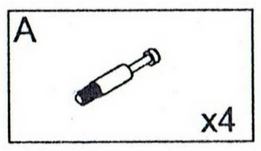
A
x4

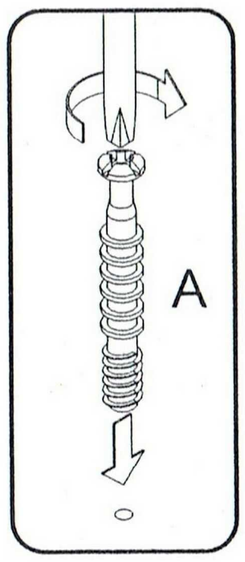
A

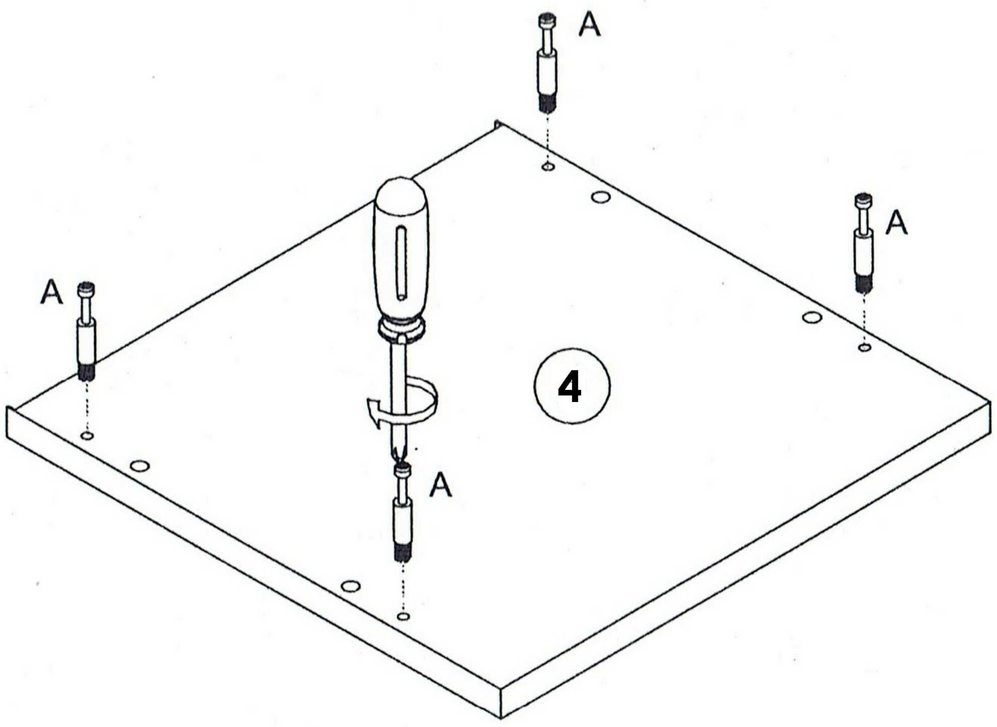
A
A
A
A
4

4

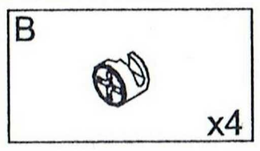
B
x4

180°
B

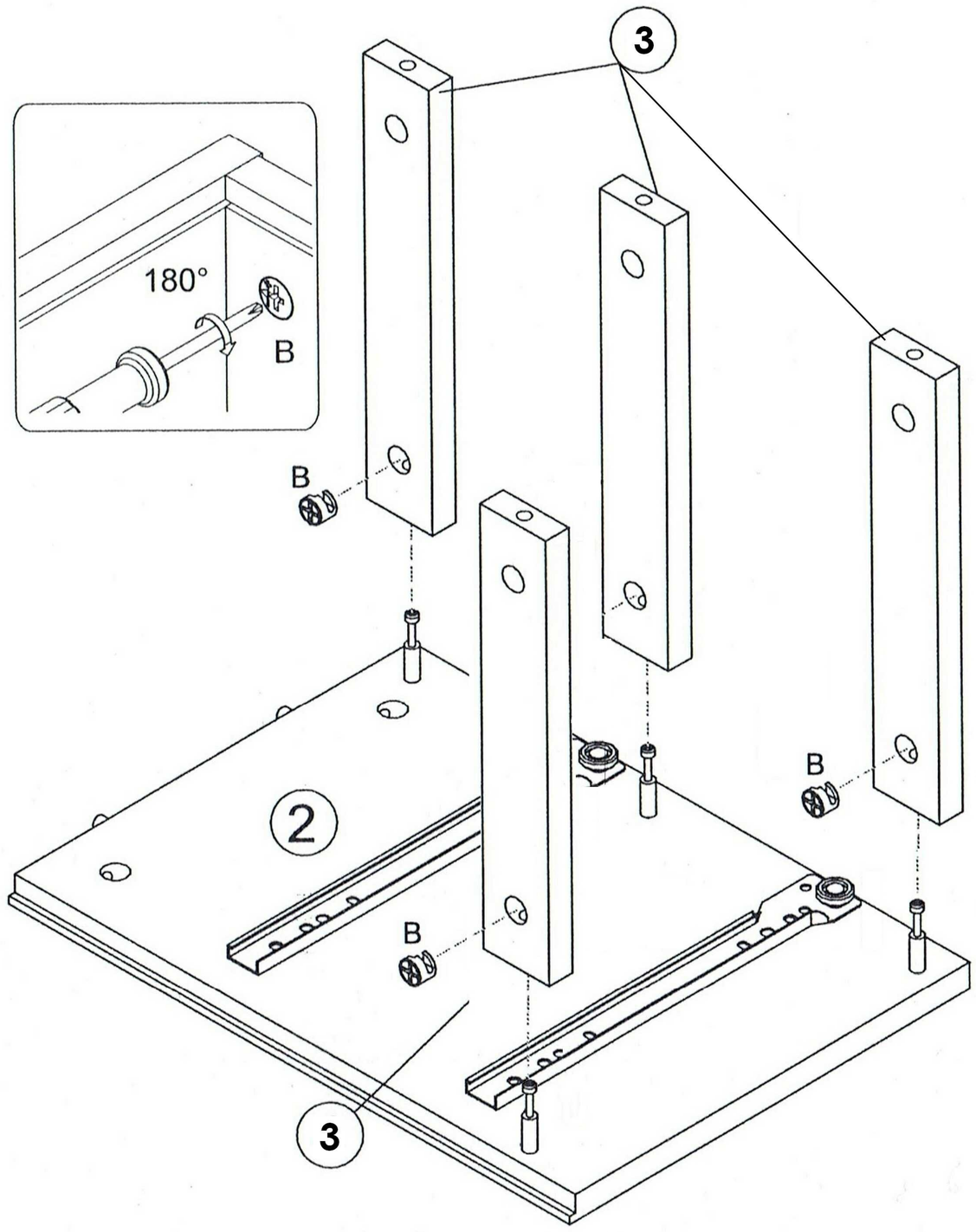
3
B
B
2
B
3

5

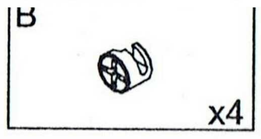
B
x4

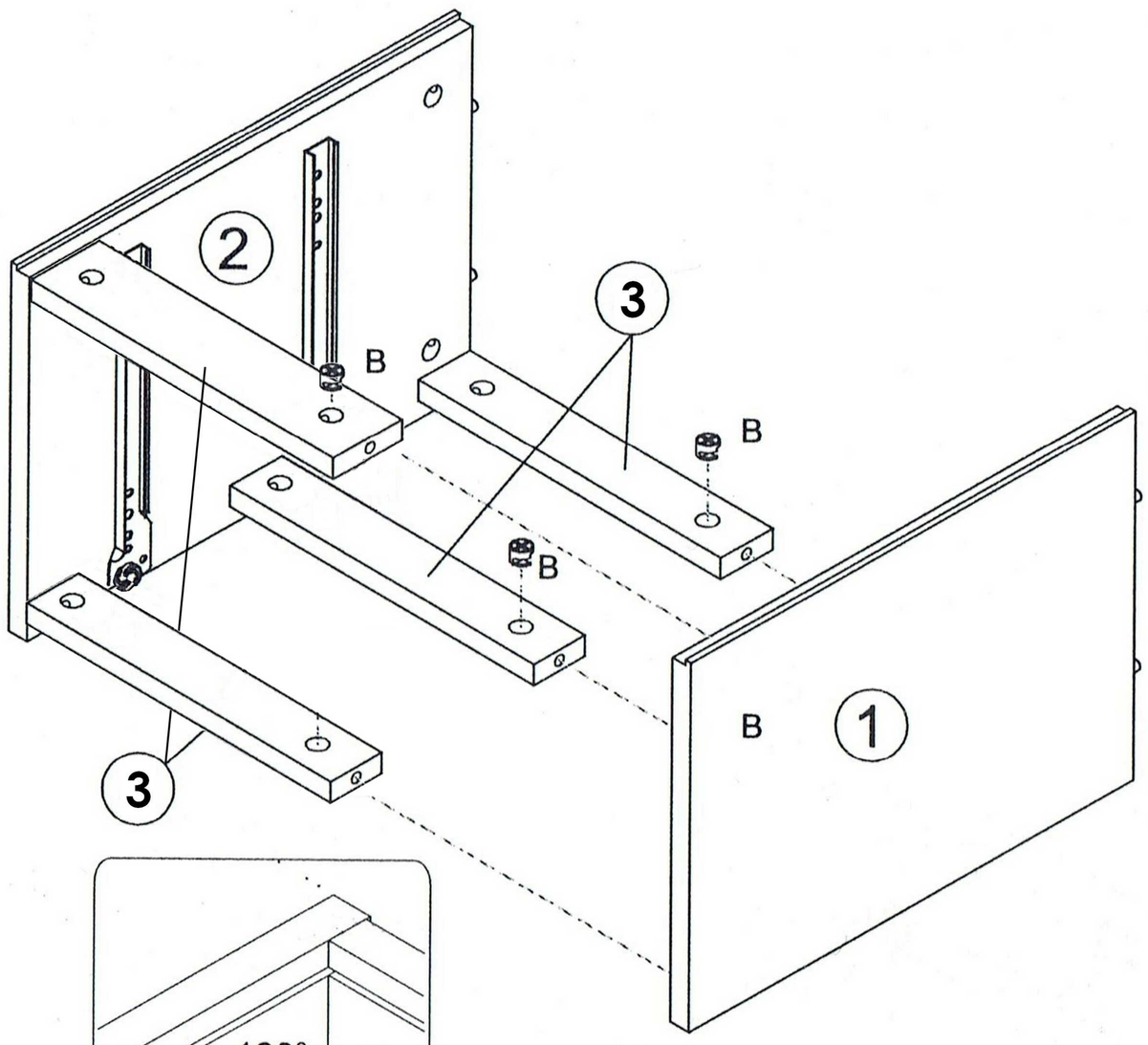
2
3
B
B
B
B
1
3

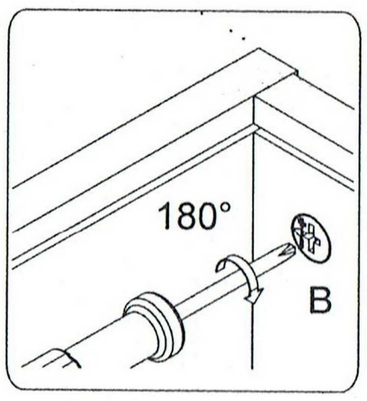
180°
B

6

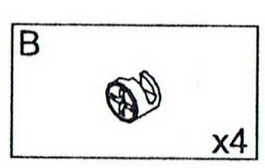
B
x4

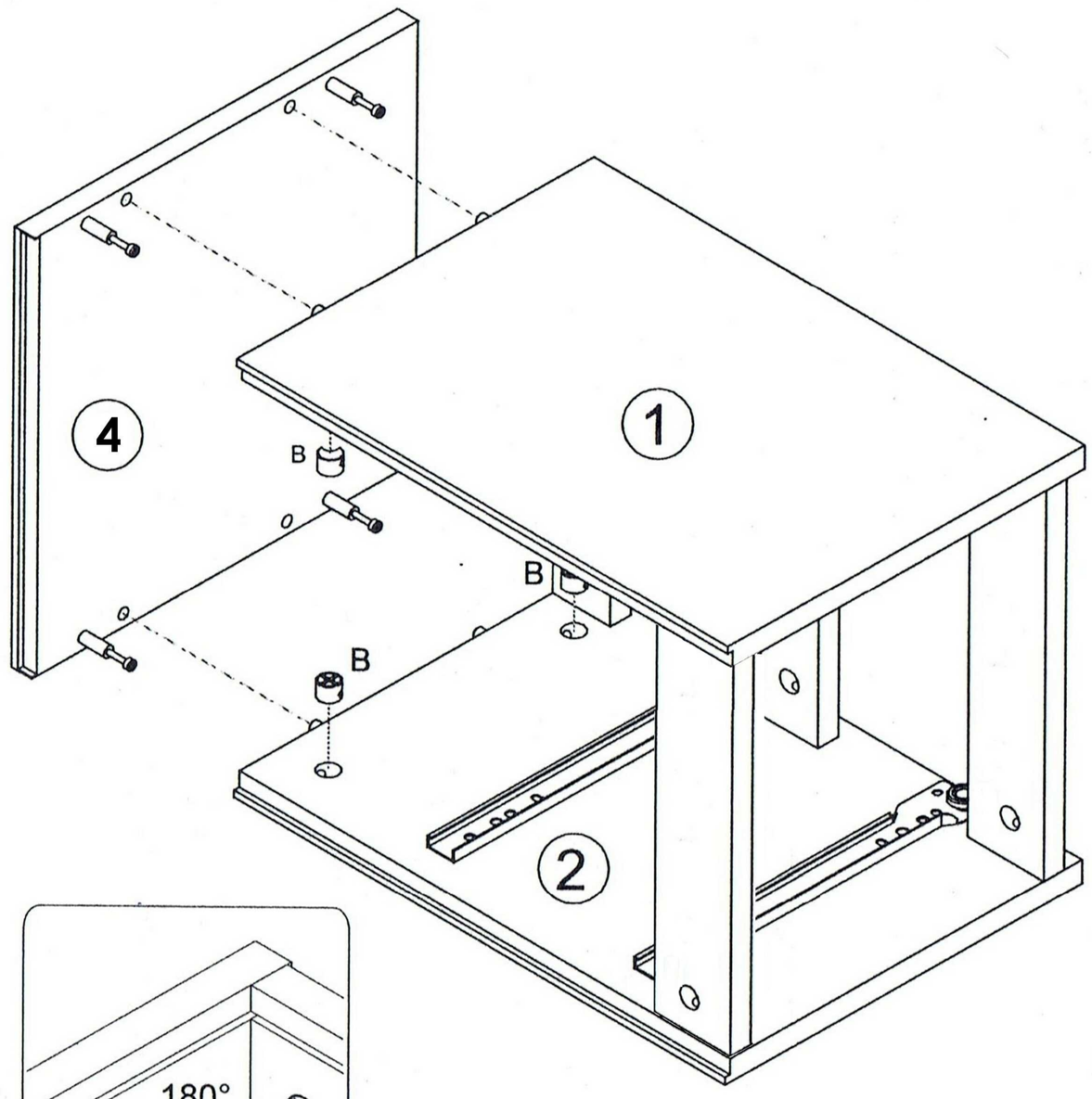
4
1
B
B
B
2

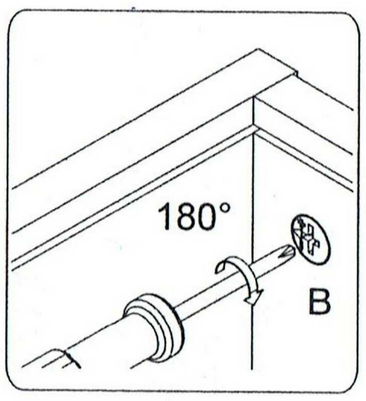
180°
B

7

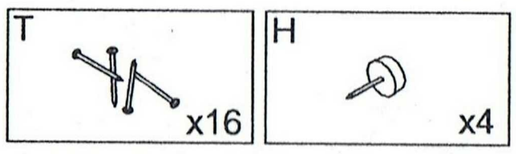
T
x16
H
x4

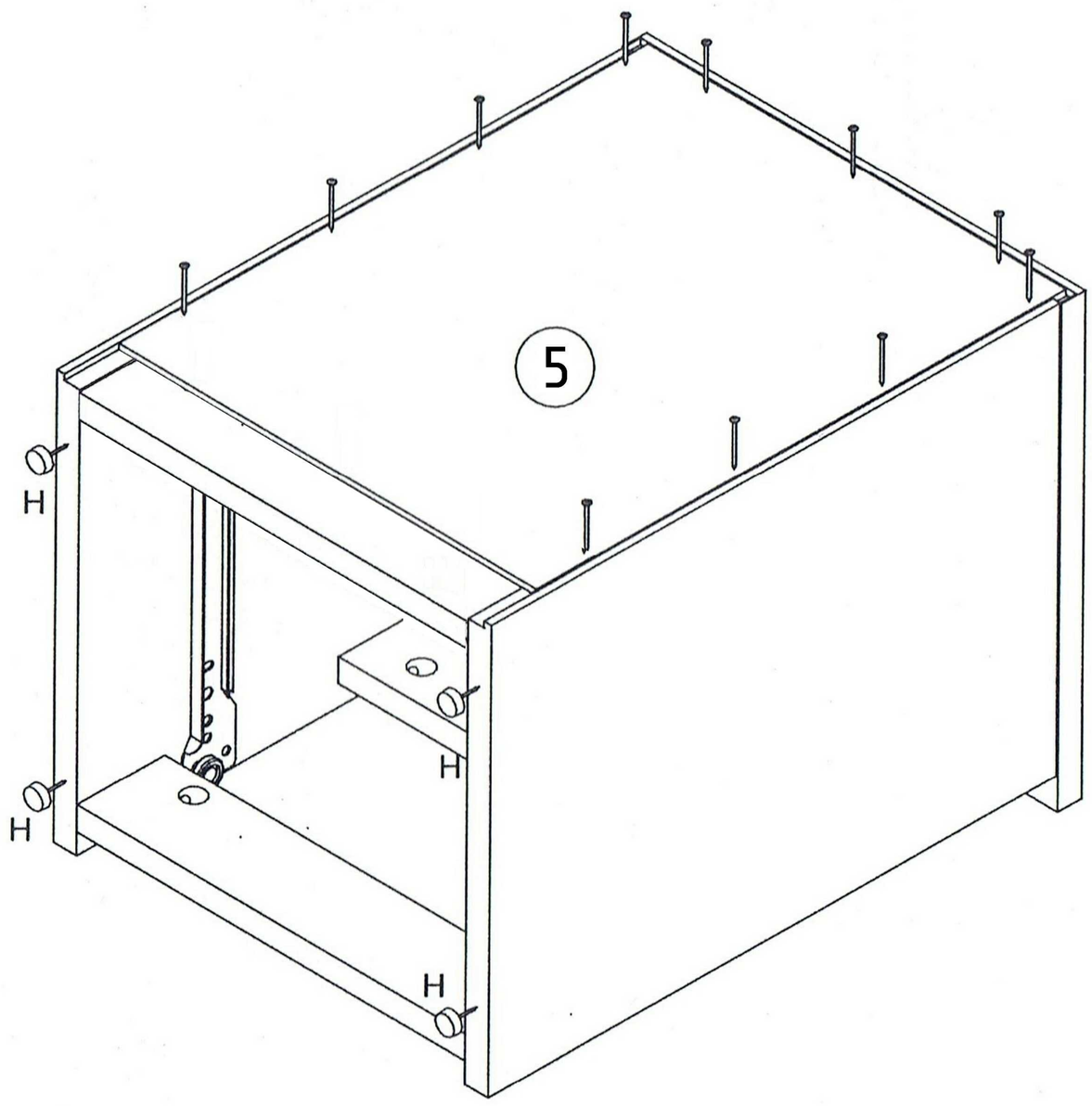
5
H
H
H
H

8

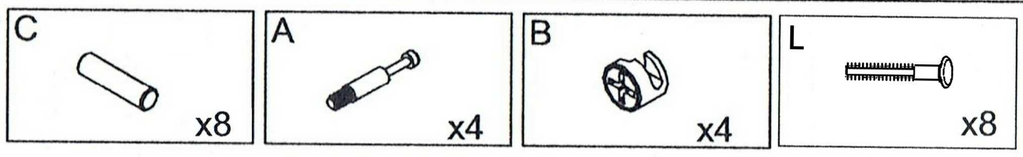
C
x8
A
x4
B
x4
L
x8

x2

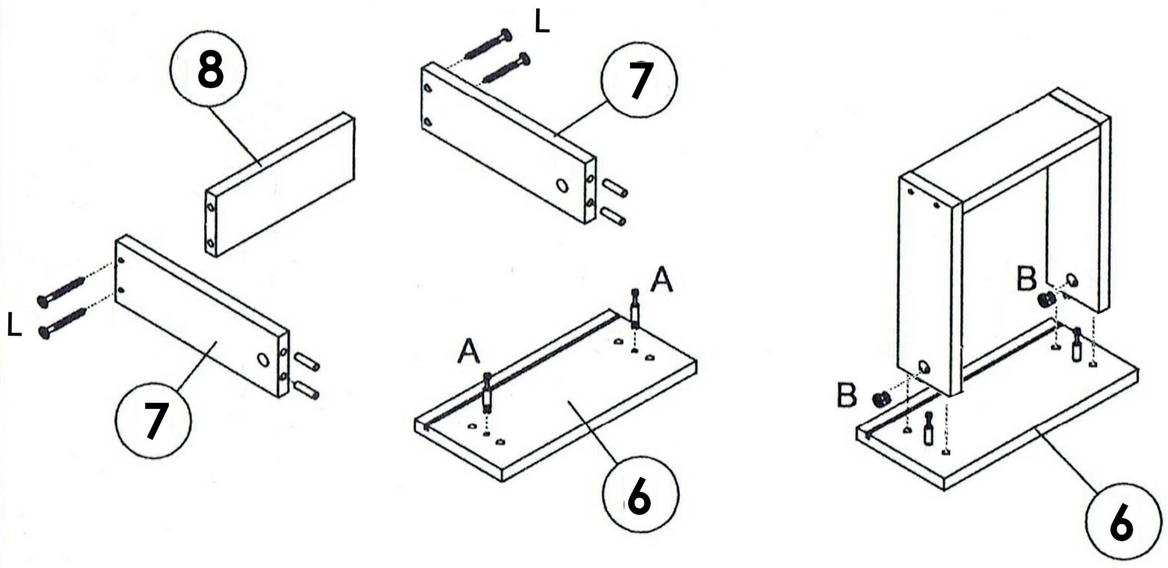
8
L
7
L
7
A
A
6
B
B
6

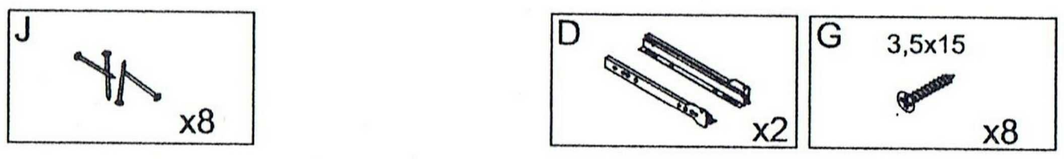
J
x8
D
x2
G
3,5x15
x8

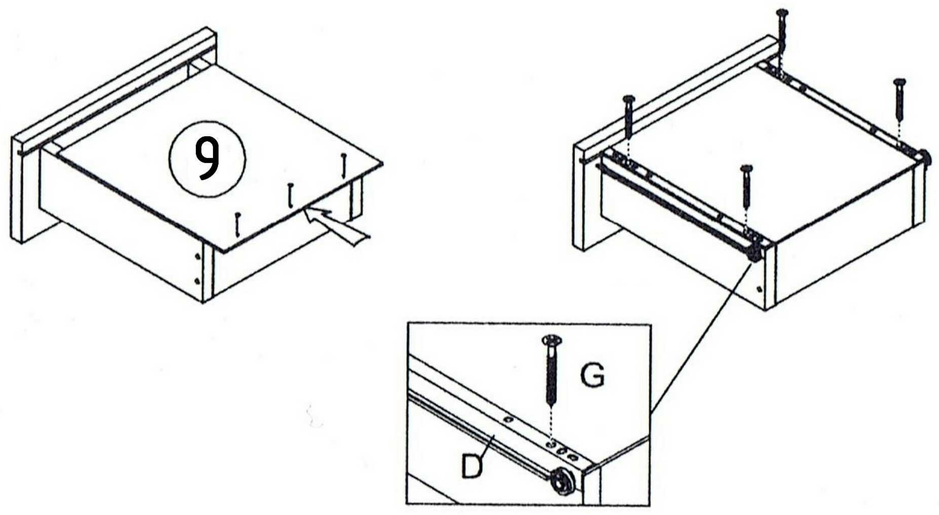
9
G
D
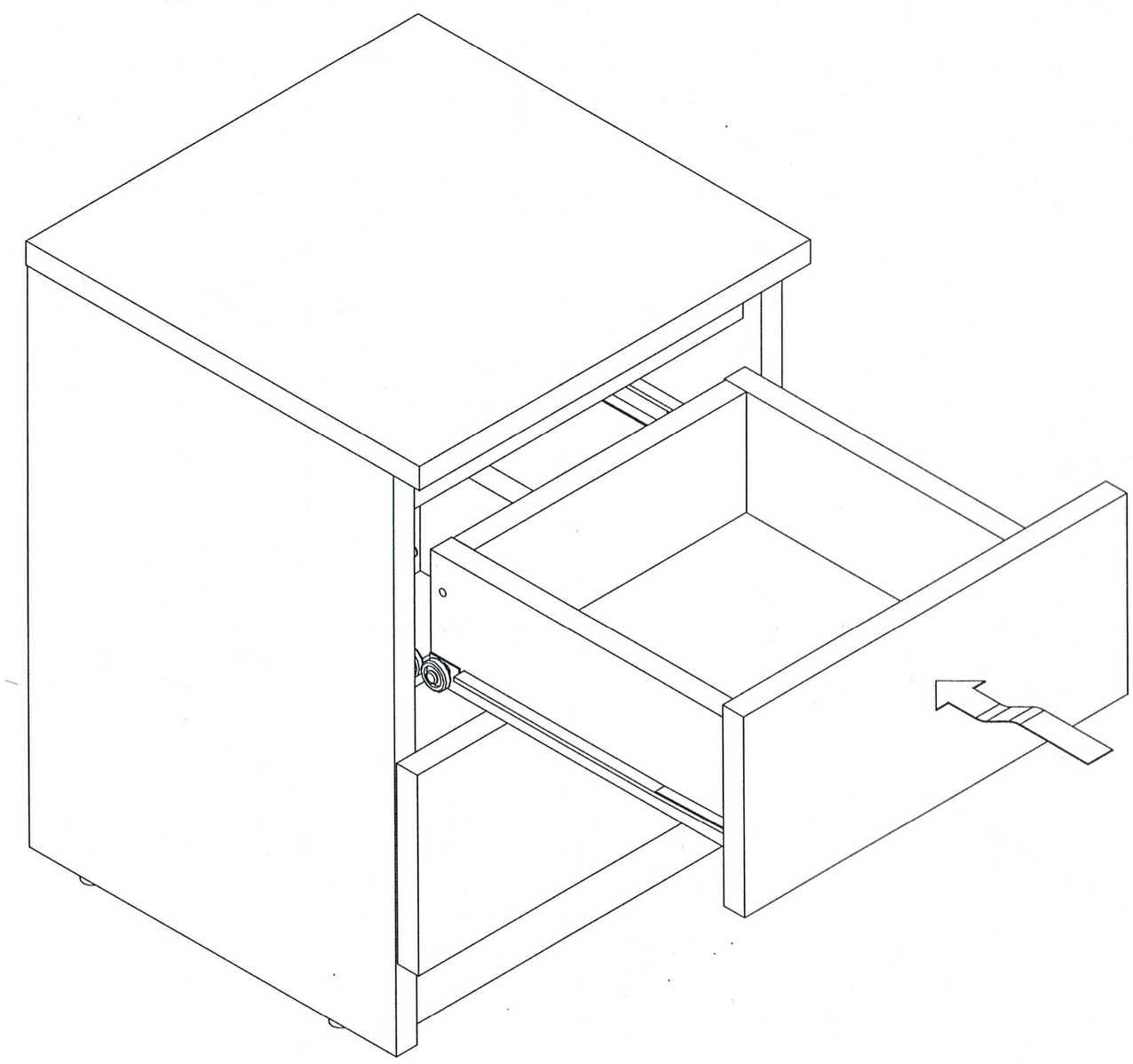
9