M8

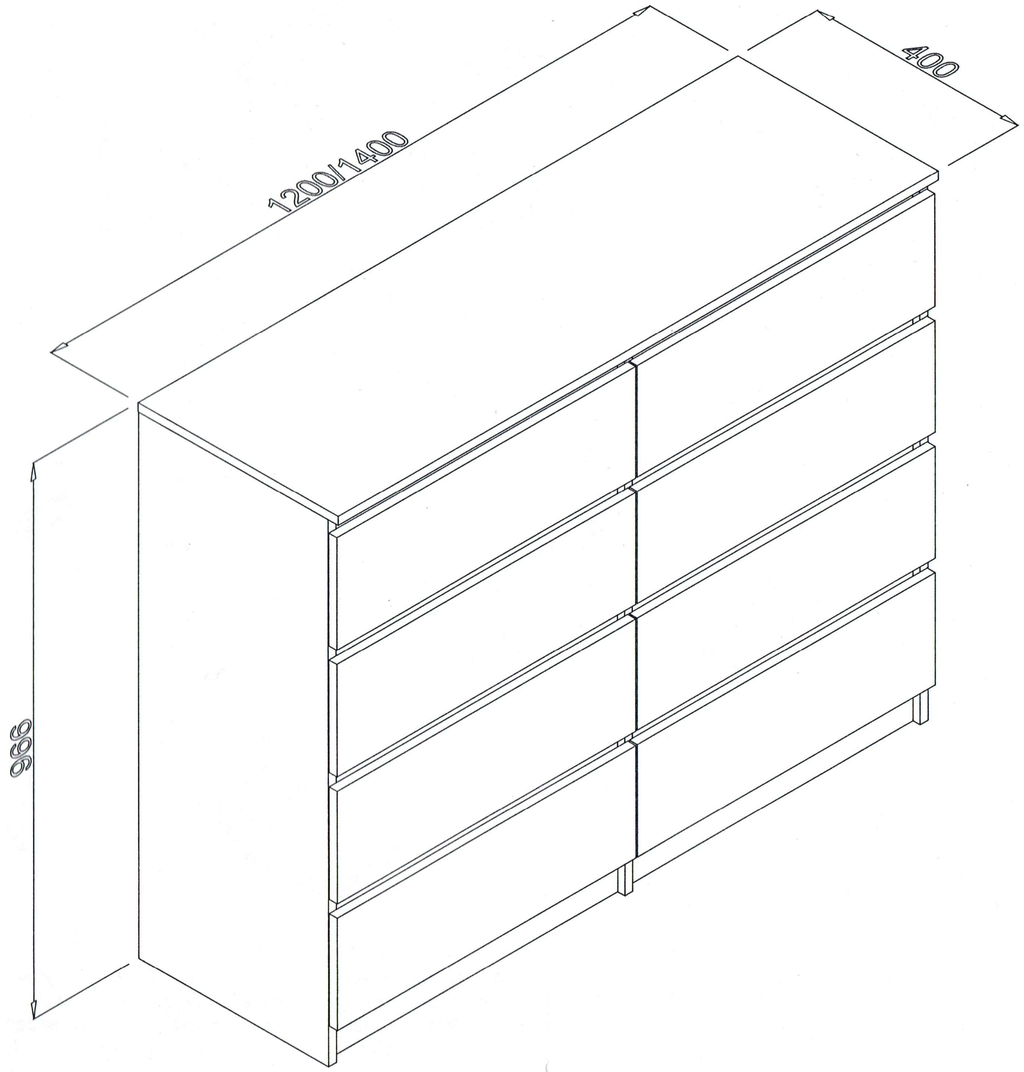
1200/1400
400
995

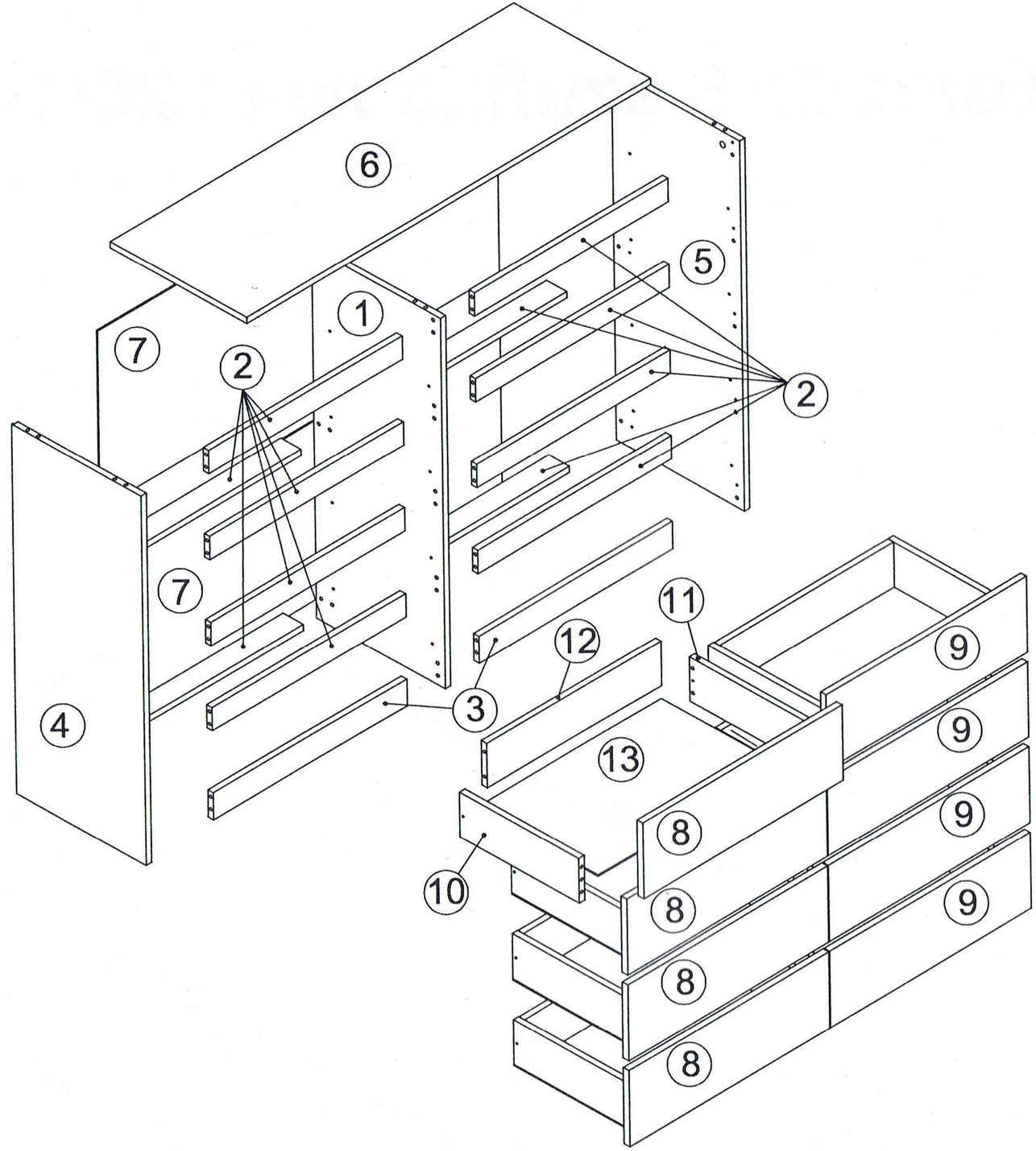
1
2
3
4
5
6
7
8
9
10
11
12
13

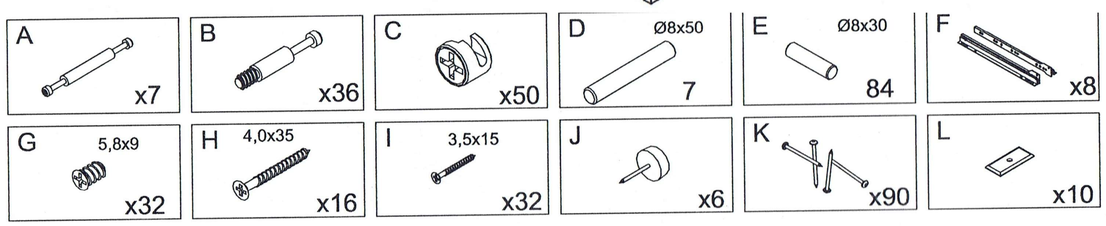
A x7
B x36
C x50
D Ø8x50 7
E Ø8x30 84
F x8
G 5,8x9 x32
H 4,0x35 x16
I 3,5x15 x32
J x6
K x90
L x10

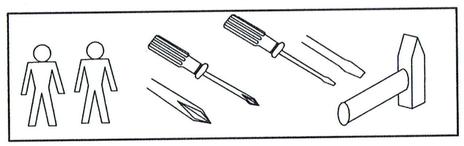

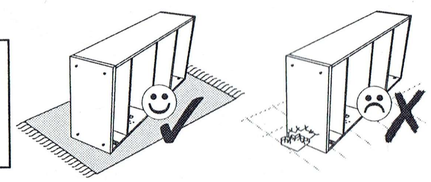

1

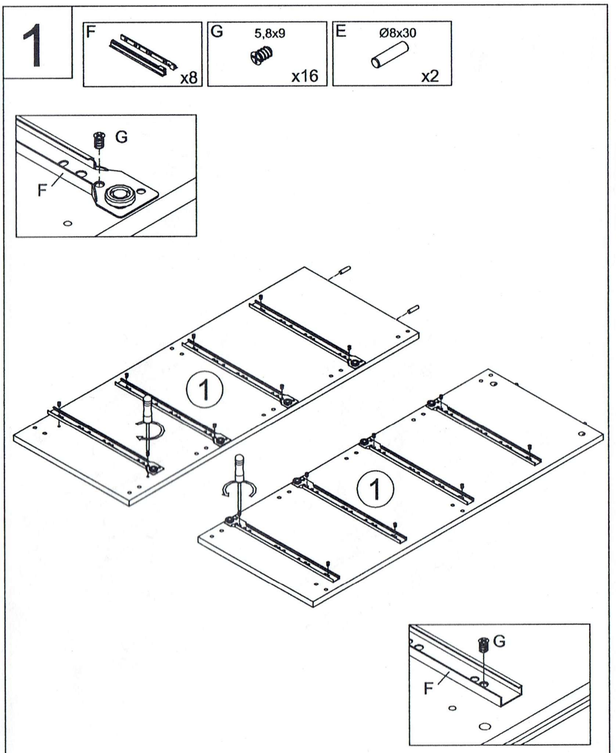
F x8
G 5,8x9 x16
E Ø8x30 x2
G
F
1
1
G
F

2

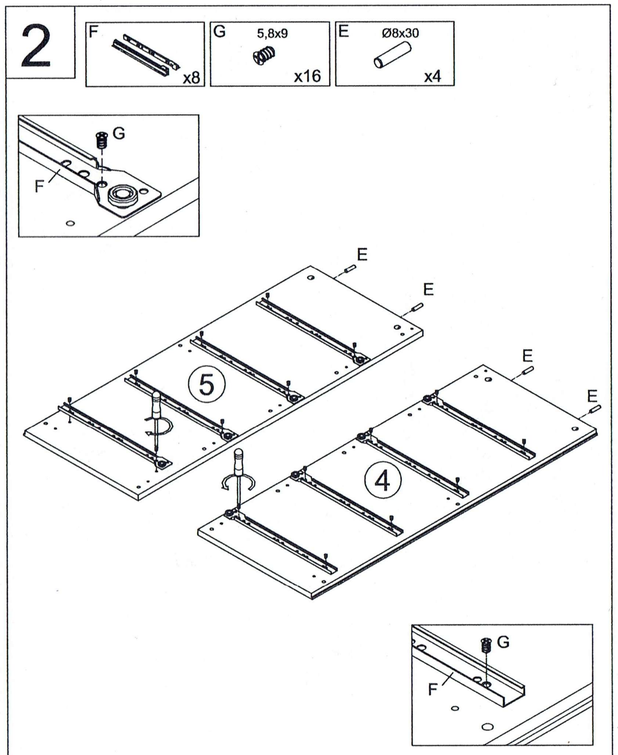
F x8
G 5,8x9 x16
E Ø8x30 x4
G
F
E
E
5
E
E
4
G
F

3

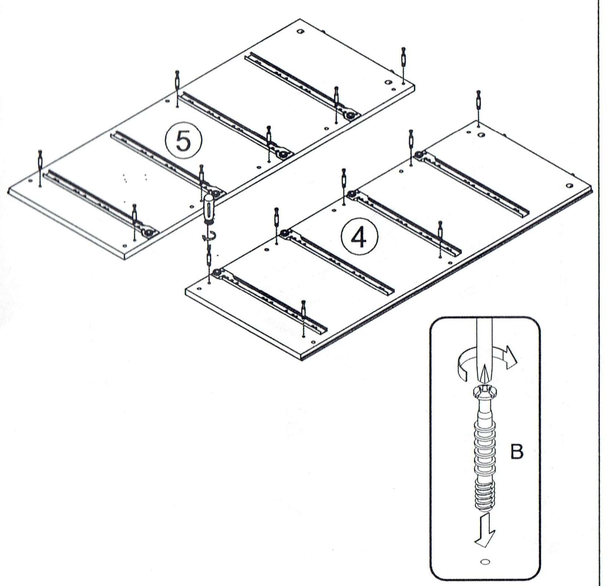
B x14
5
4
B

4

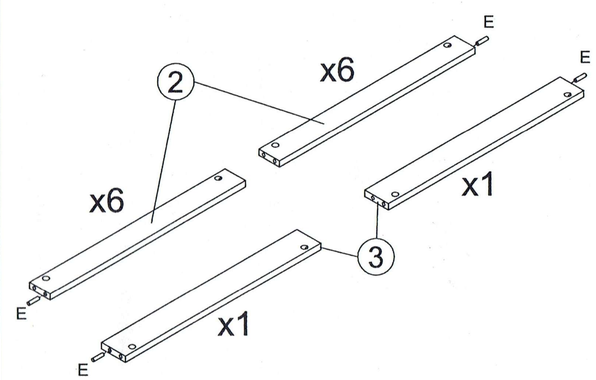
E Ø8x30 x14
2
x6
E
E
x6
x1
3
E
x1
E

5

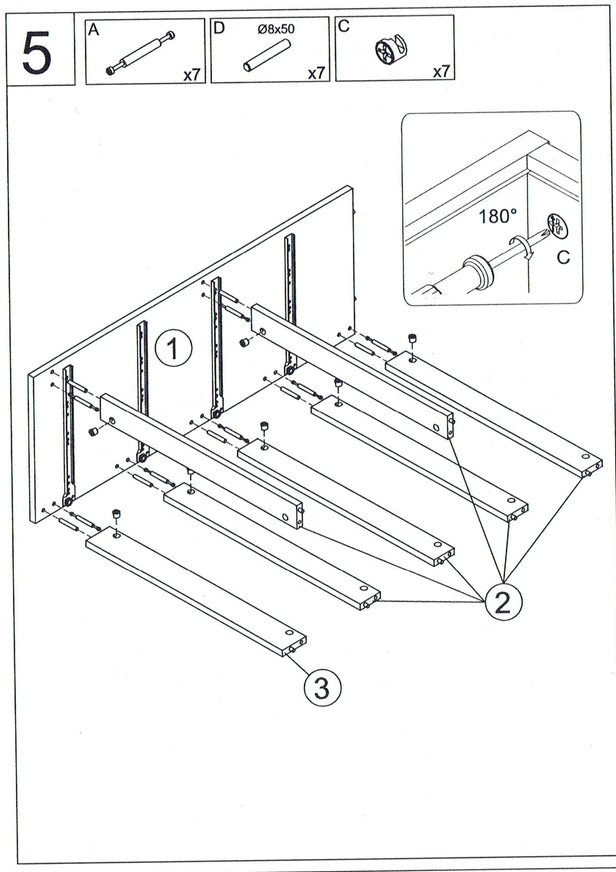
A x7
D Ø8x50 x7
C x7
180°
C
1
2
3

6

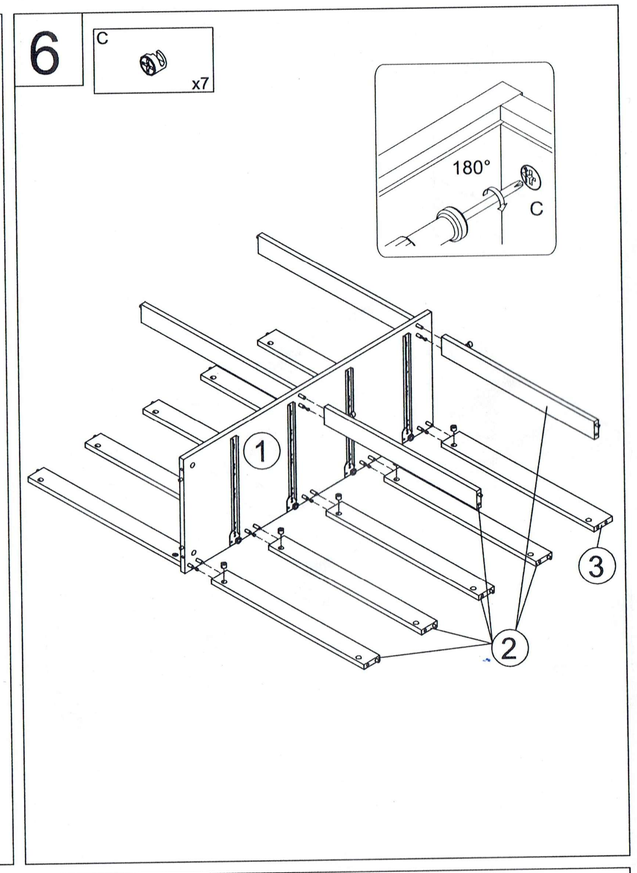
C x7
180°
C
1
2
3

7

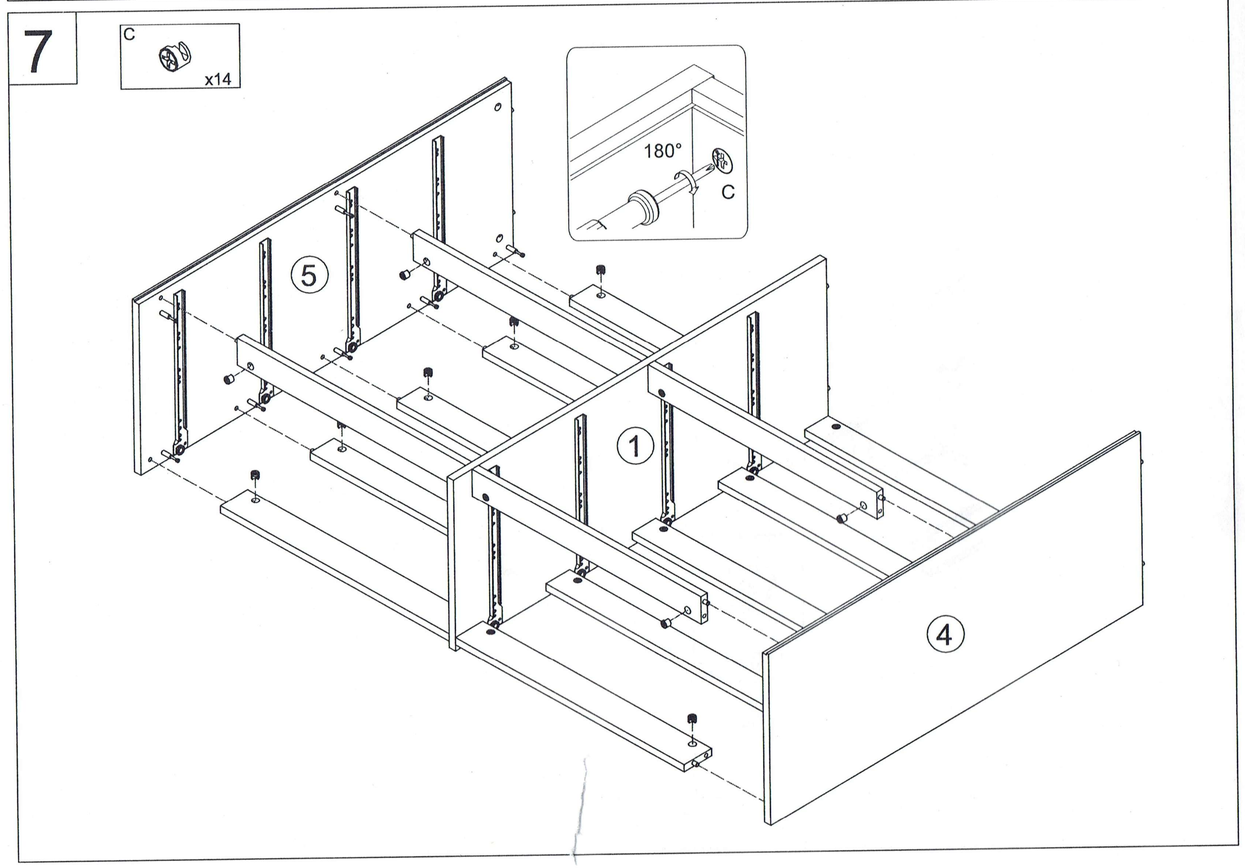
C x14
180°
C
5
1
4

8

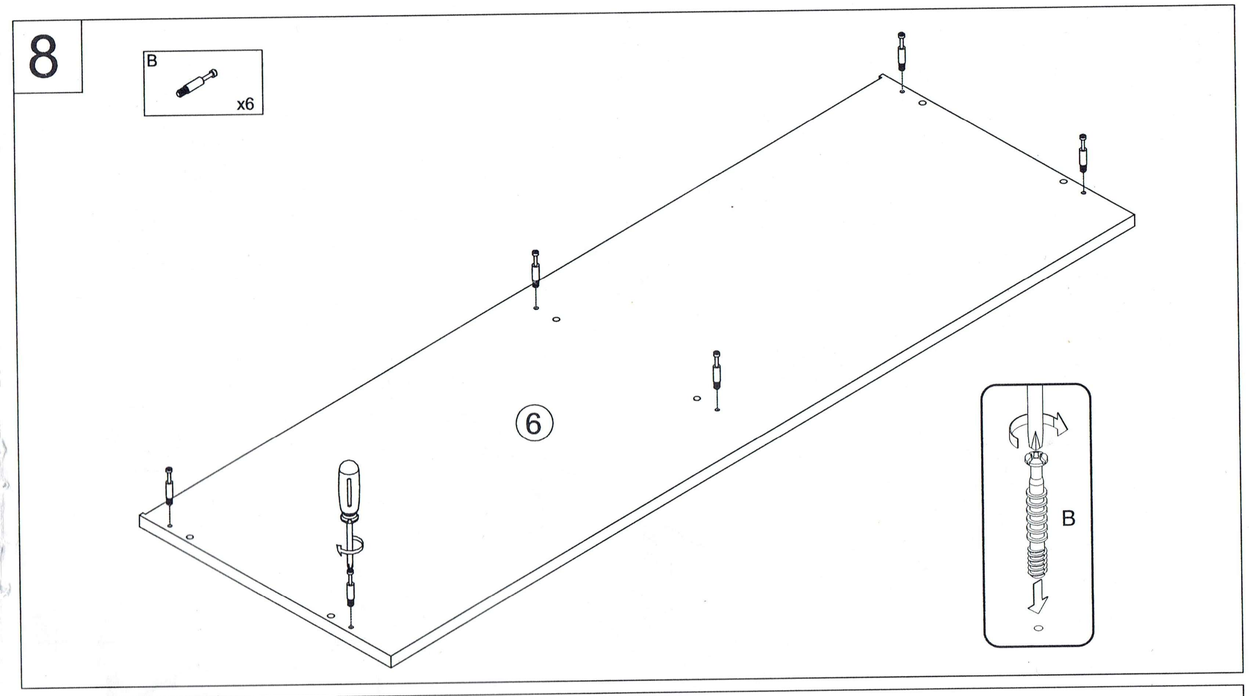
B
x6
6
B

9

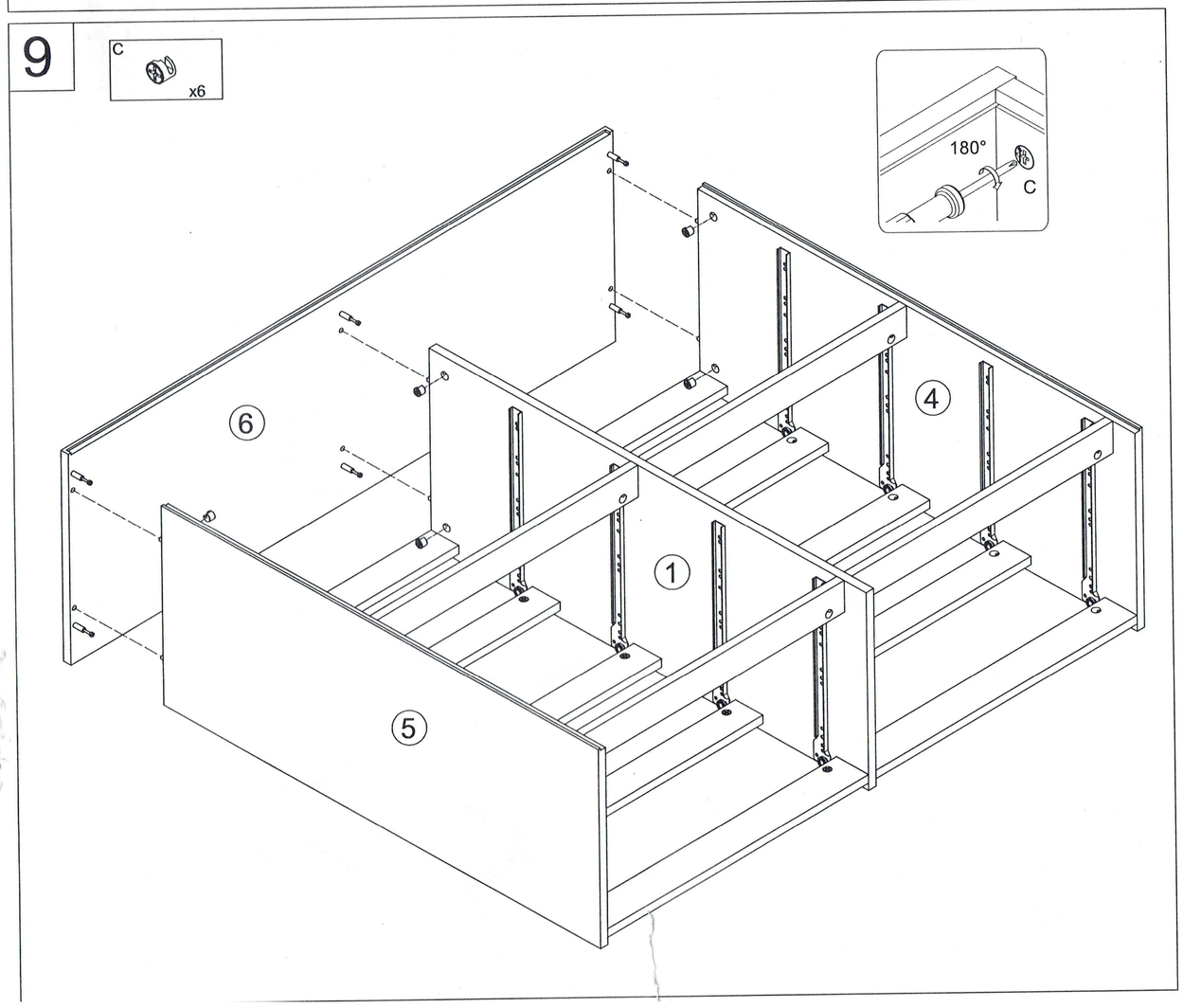
C
x6
180°
C
6
4
1
5

10

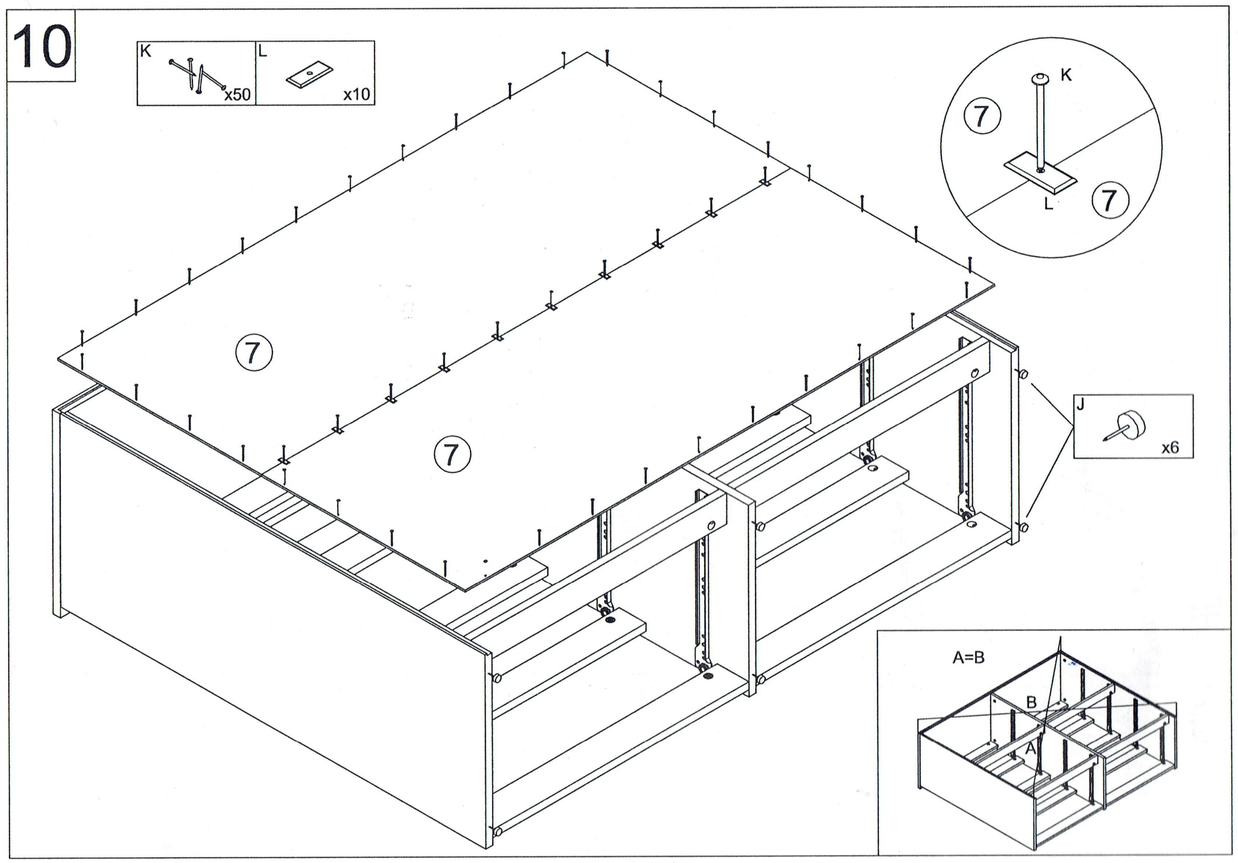
K
x50
L
x10
K
7
L
7
7
7
J
x6
A=B
B
A

11

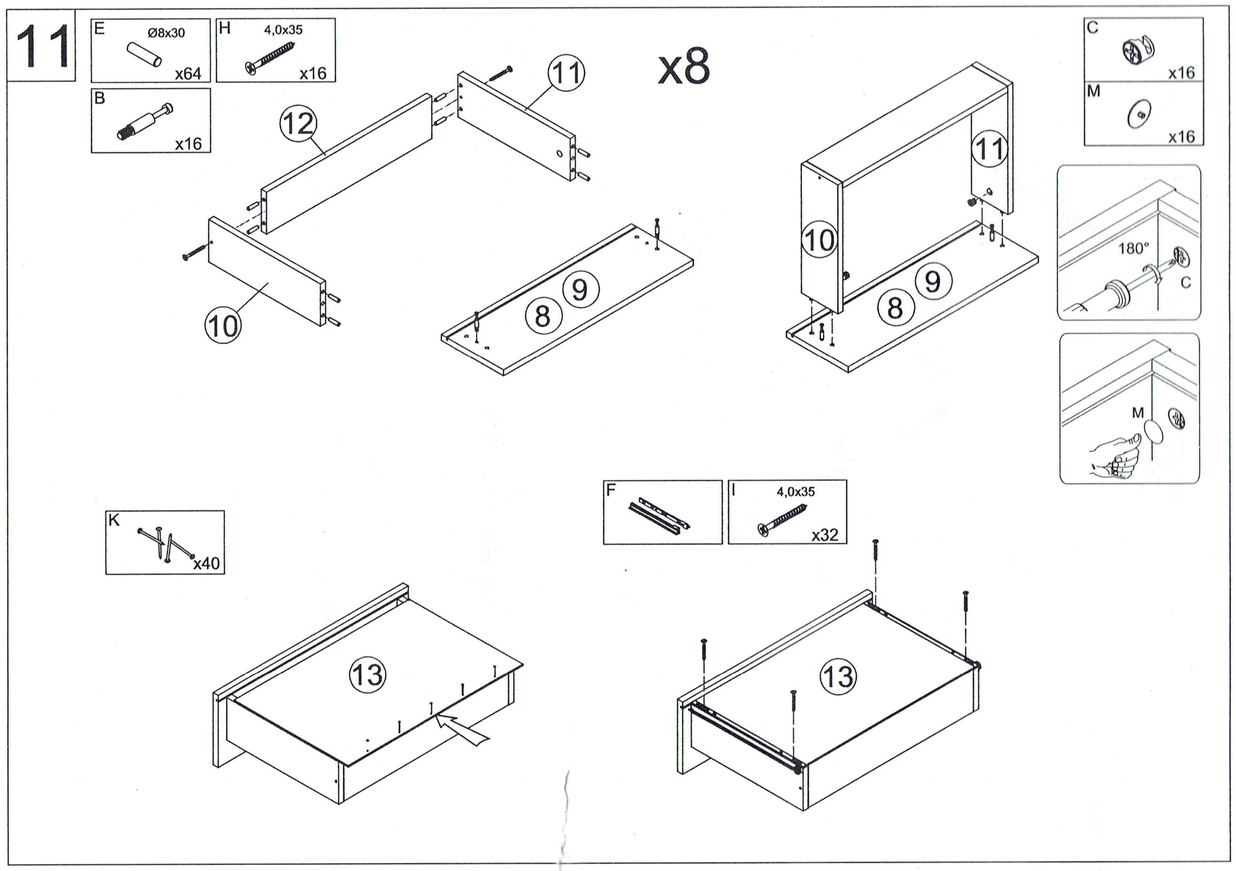
E
Ø8x30
x64
H
4,0x35
x16
B
x16
x8
11
12
10
9
8
11
10
9
8
C
x16
M
x16
180°
C
M
K
x40
F
I
4,0x35
x32
13
13

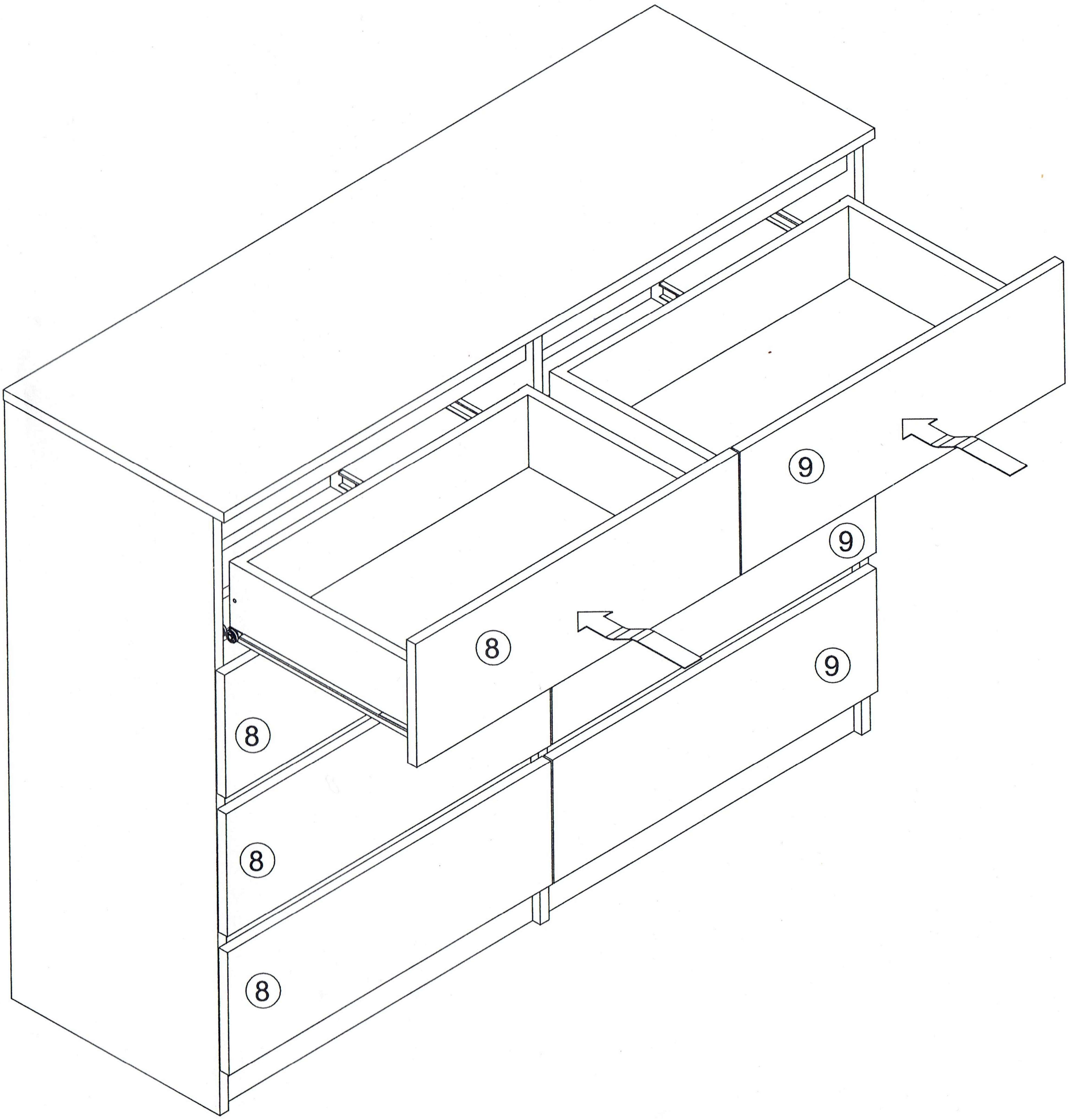
9
9
8
9
8
8
8