# KALAX 4x4

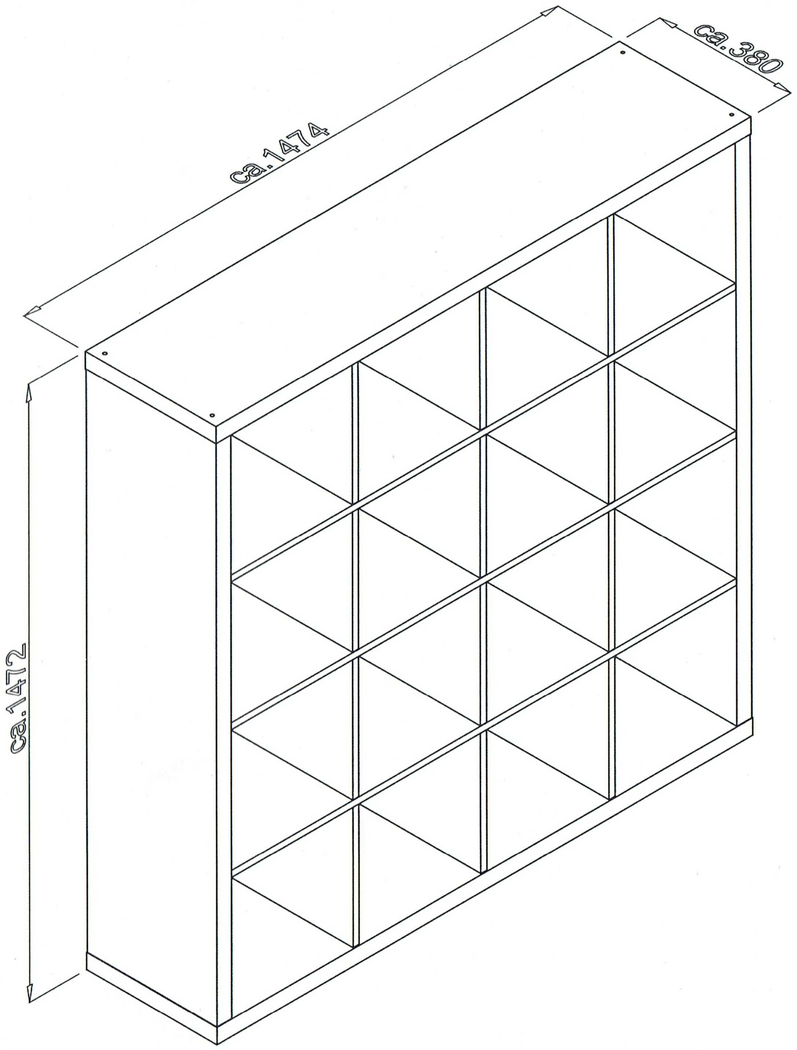


| | | |
|---|---|---|
| 1 | x2 | ca. 1474 x 380 x 40 |
| 2 | x2 | ca. 1392 x 378 x 40 |
| 3 | x12 | ca. 336 x 374 x 16 |
| 4 | x3 | ca. 1392 x 376 x 16 |

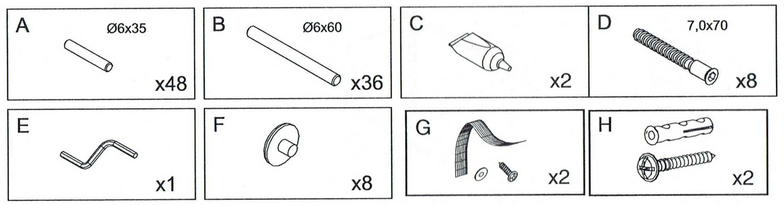


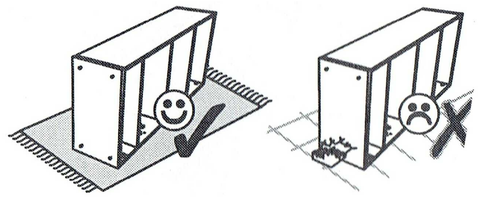

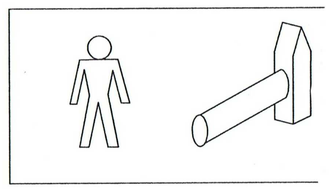

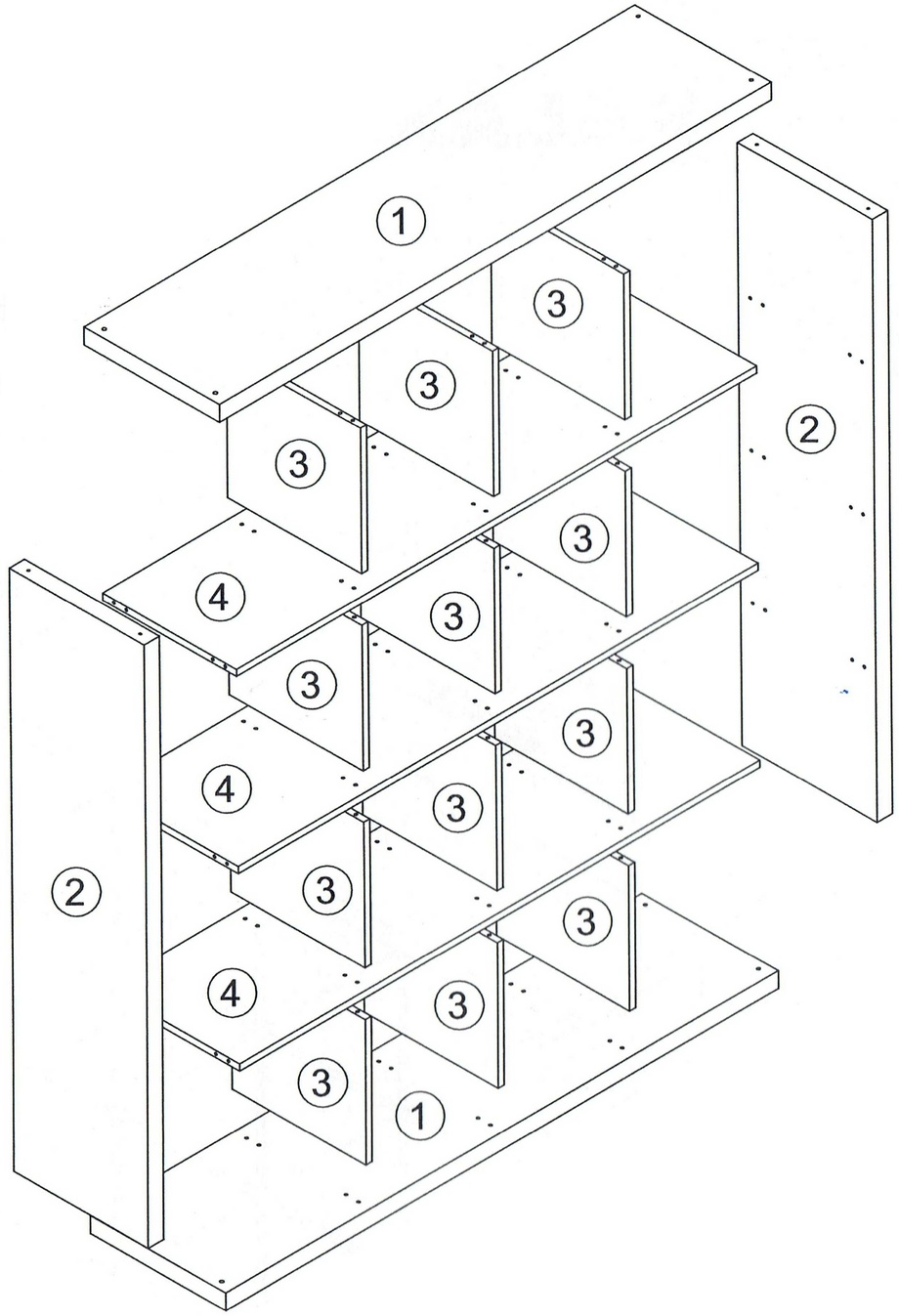

## 1

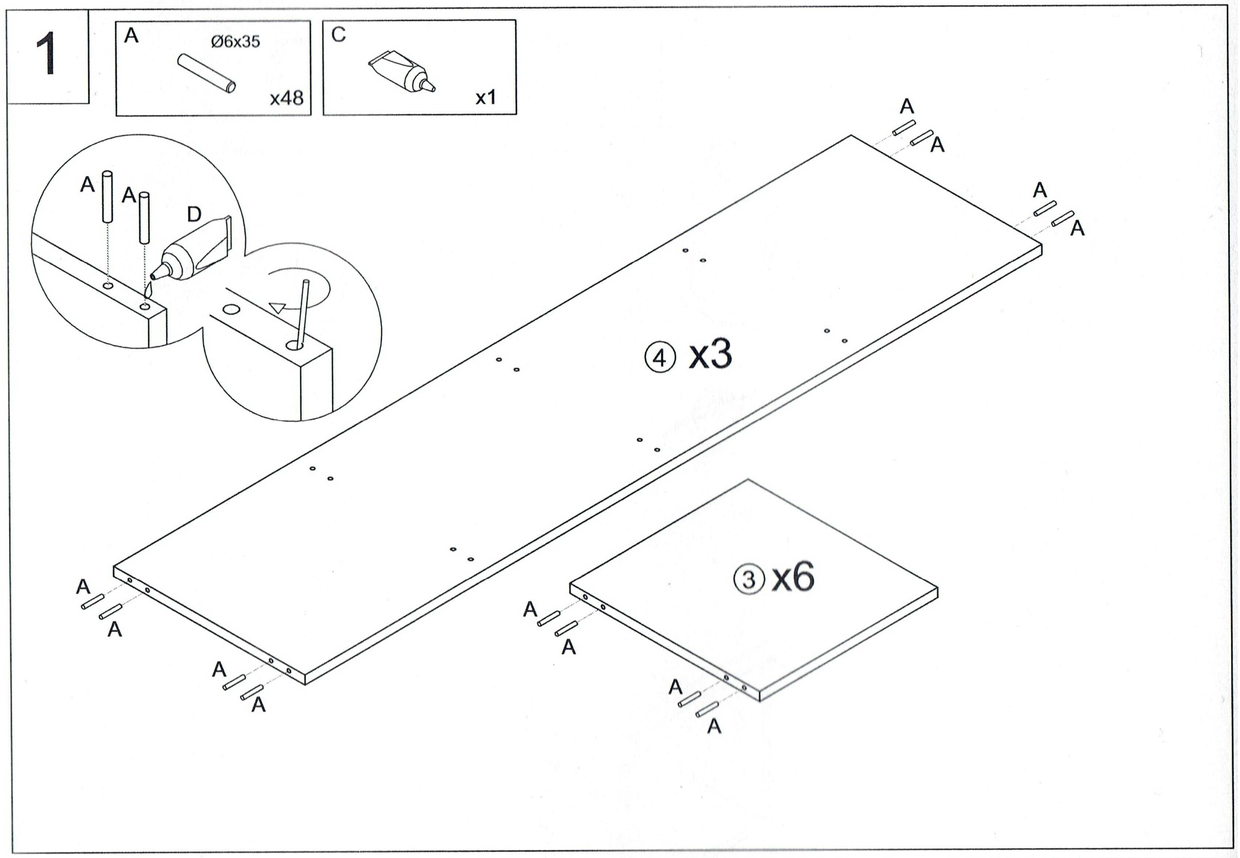
A
Ø6x35
x48
C
x1
A
A
D
④ x3
③ x6

## 2

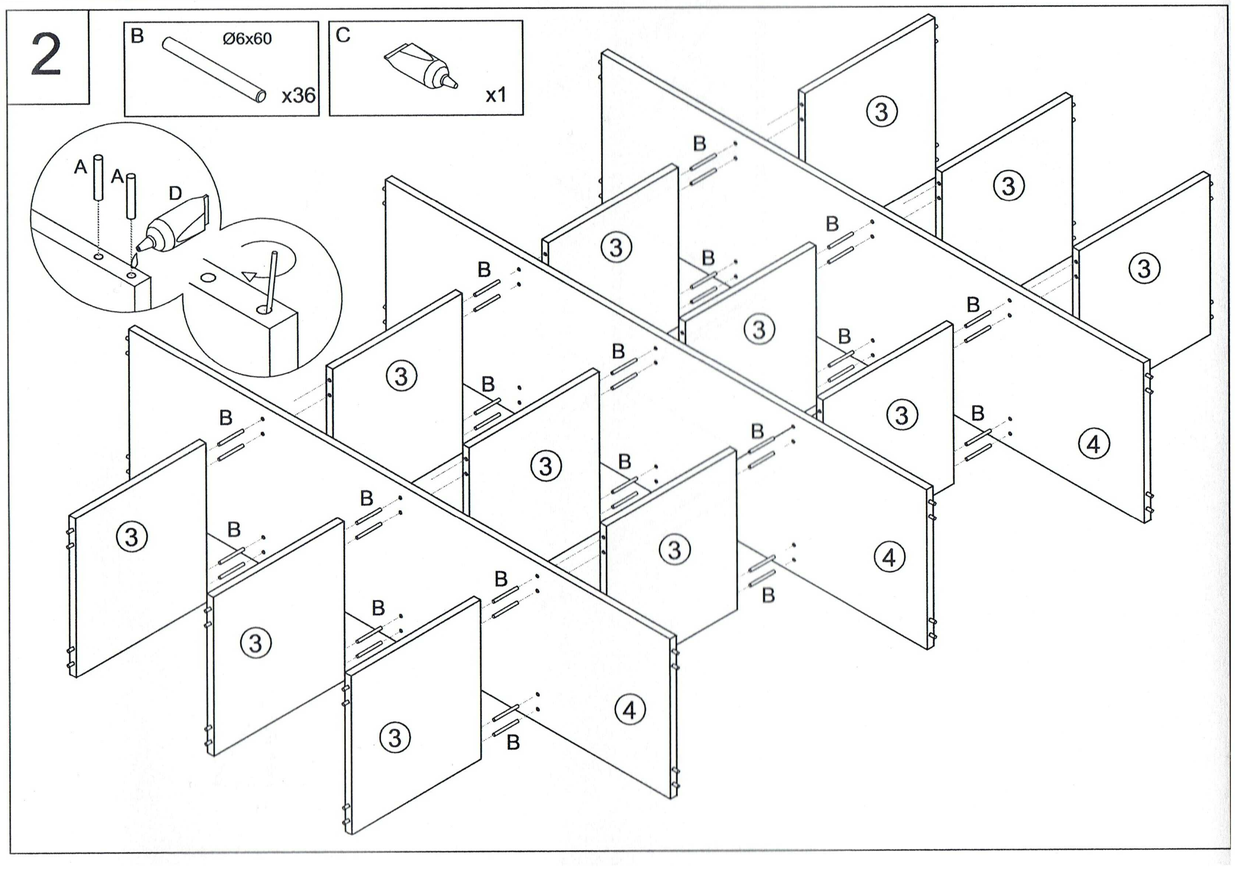
B
Ø6x60
x36
C
x1
A
A
D
③
④

## 3

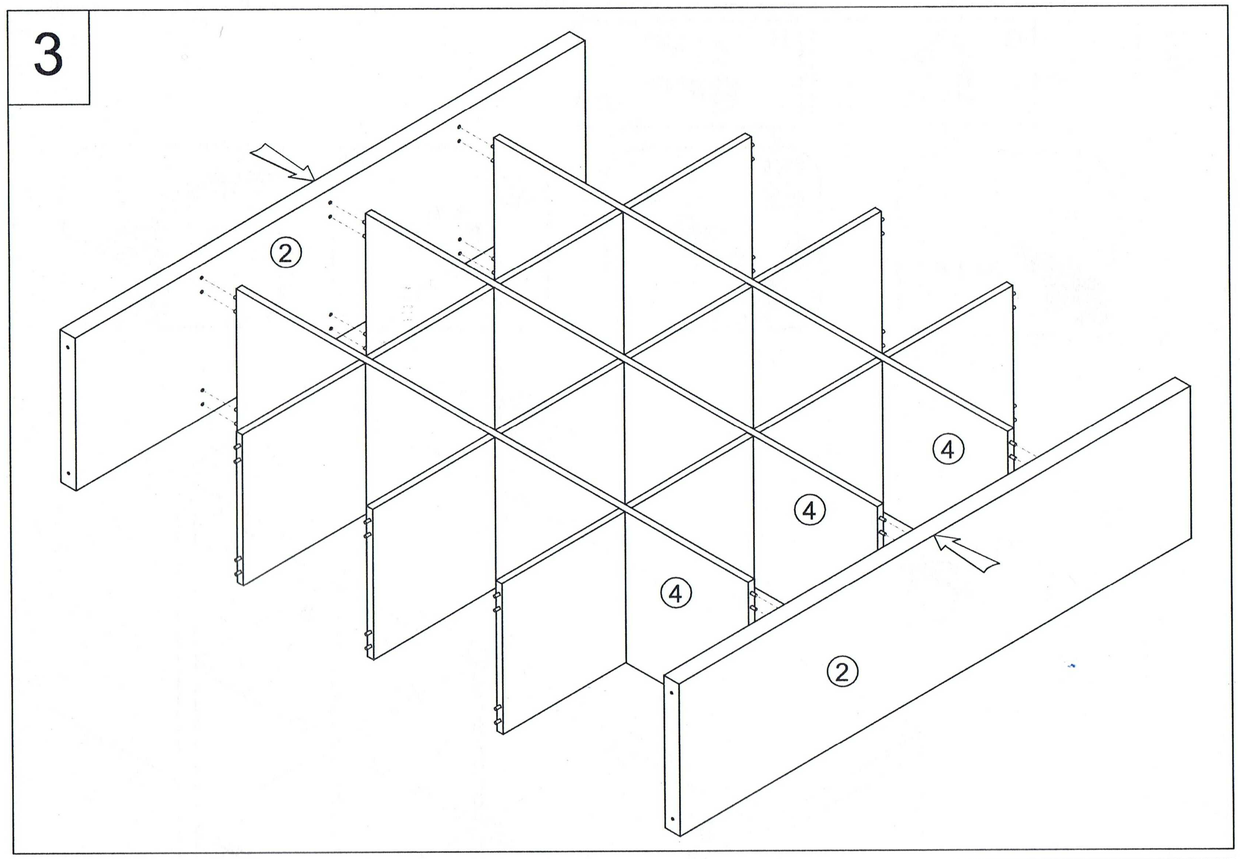
②
④

## 4

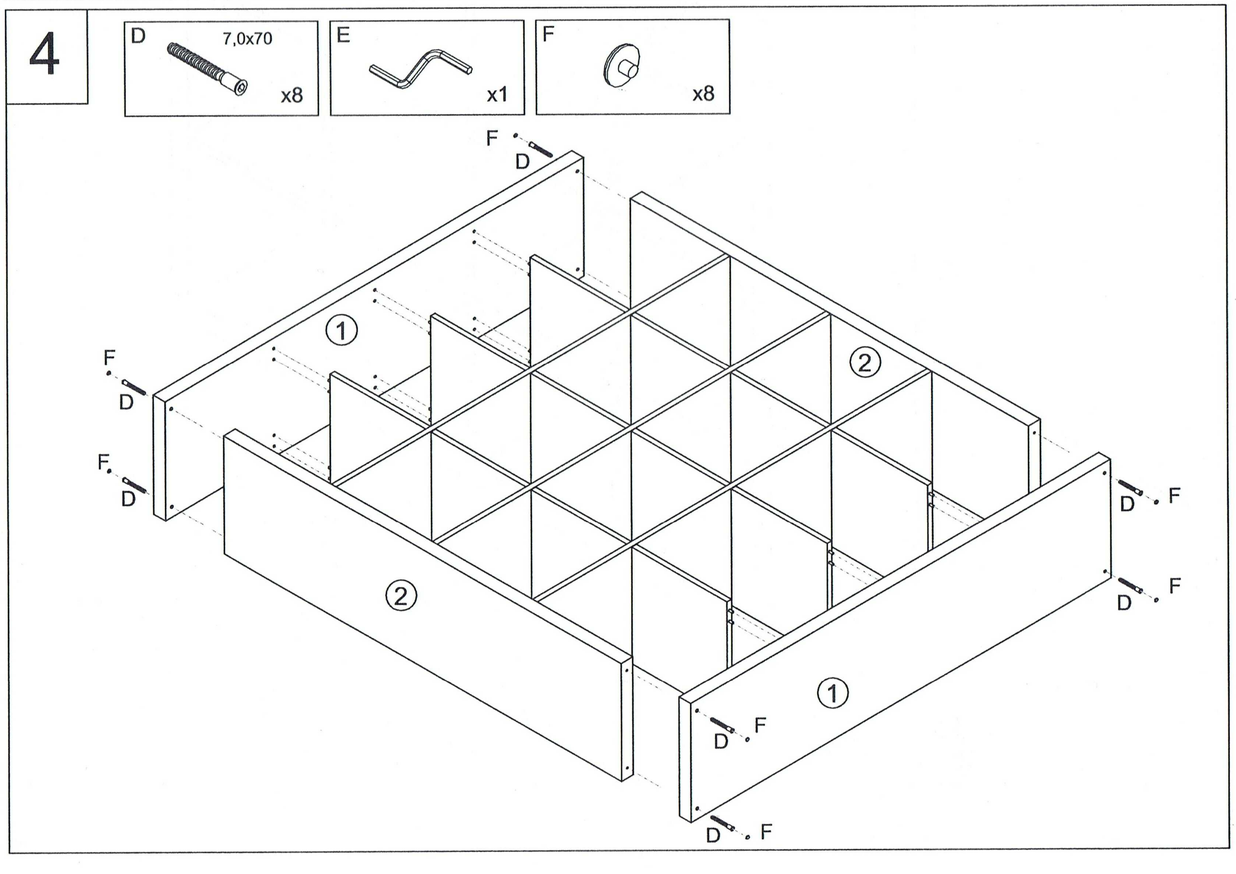
D
7,0x70
x8
E
x1
F
x8
①
②
D
F
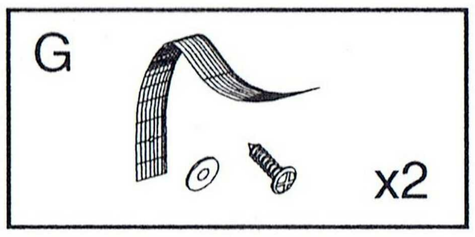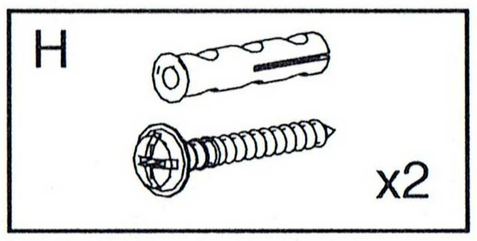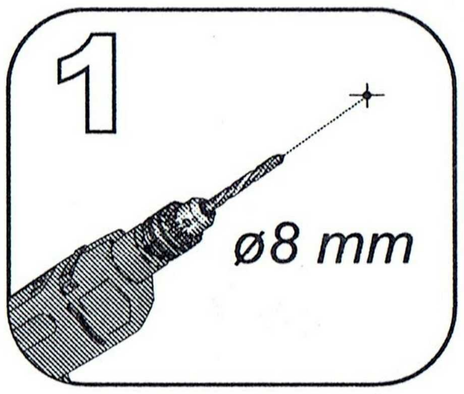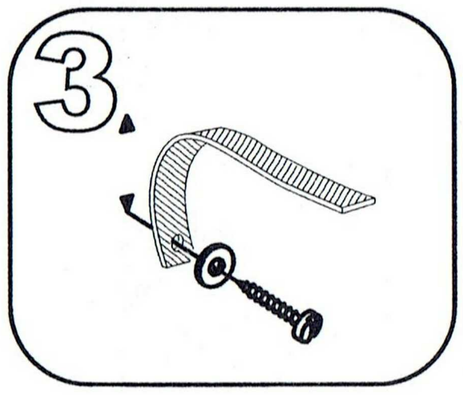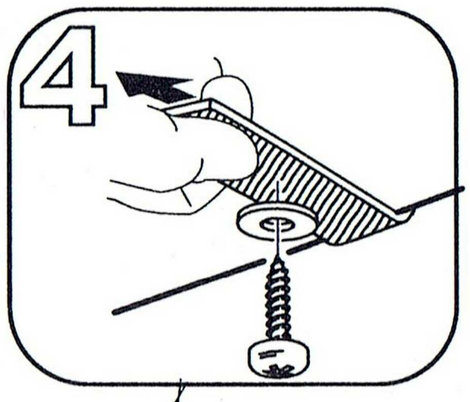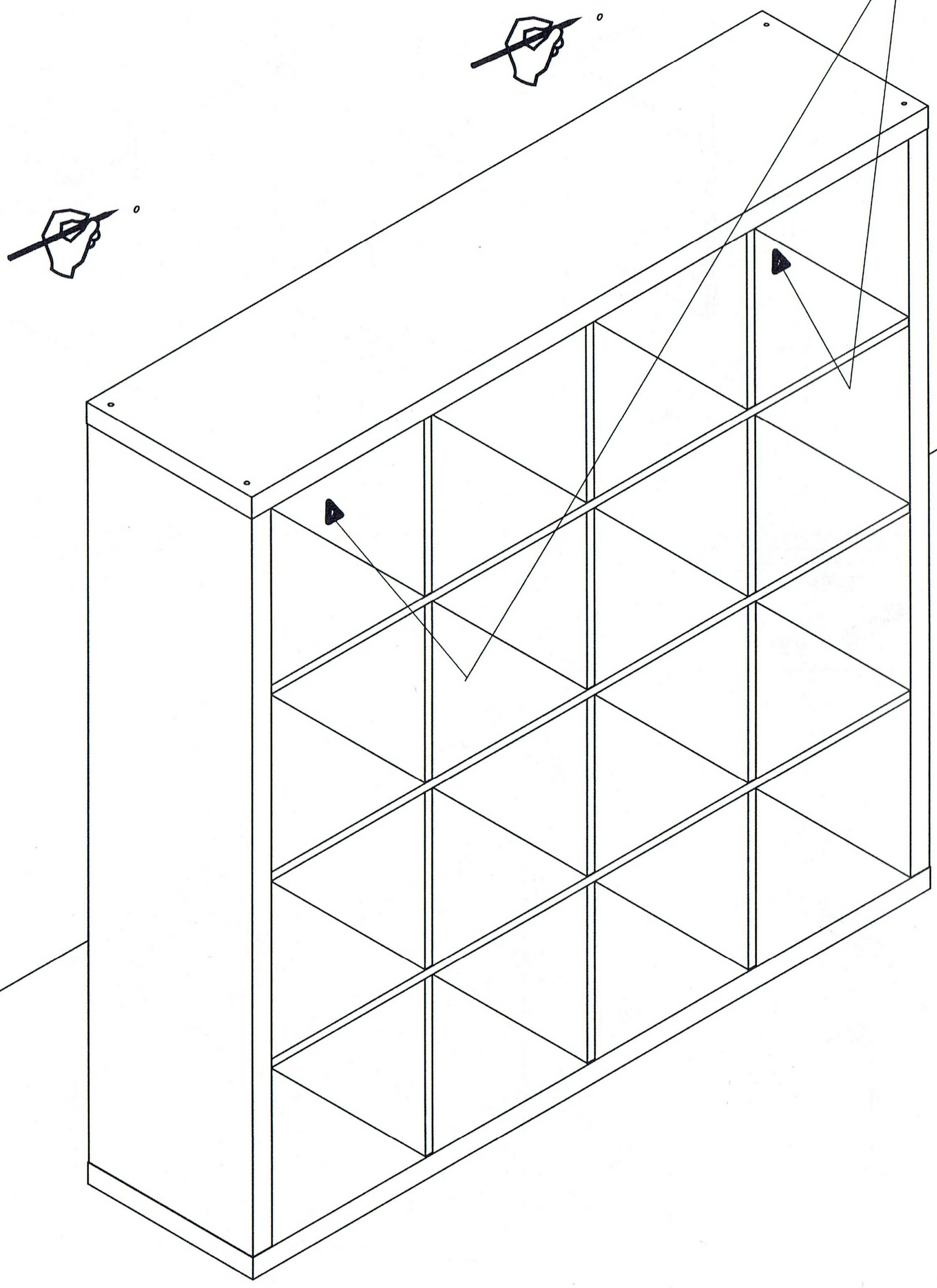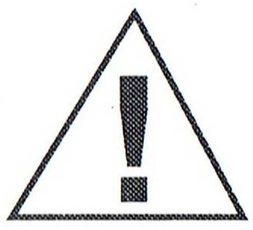
# 5