M2

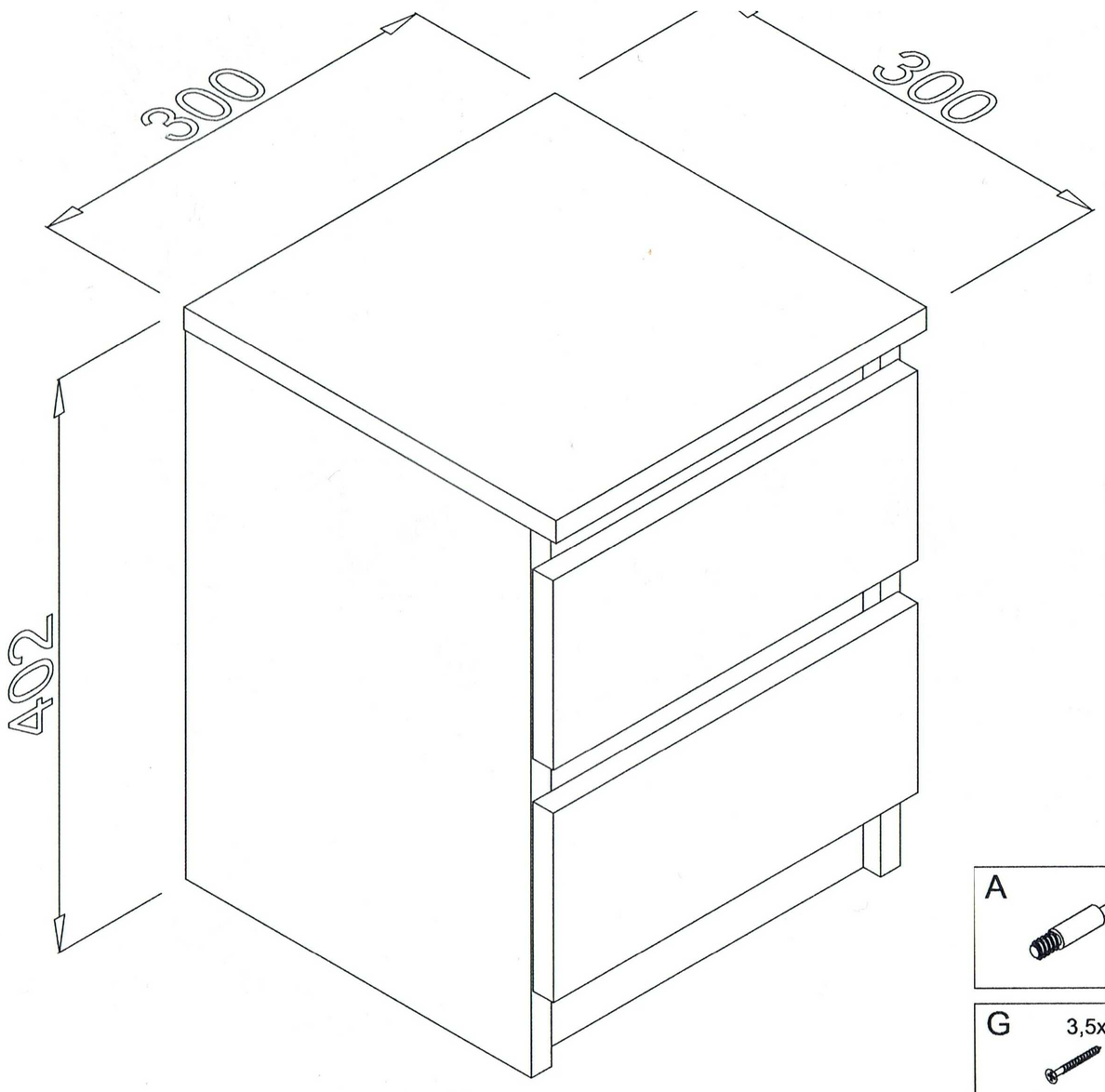
300
300
402

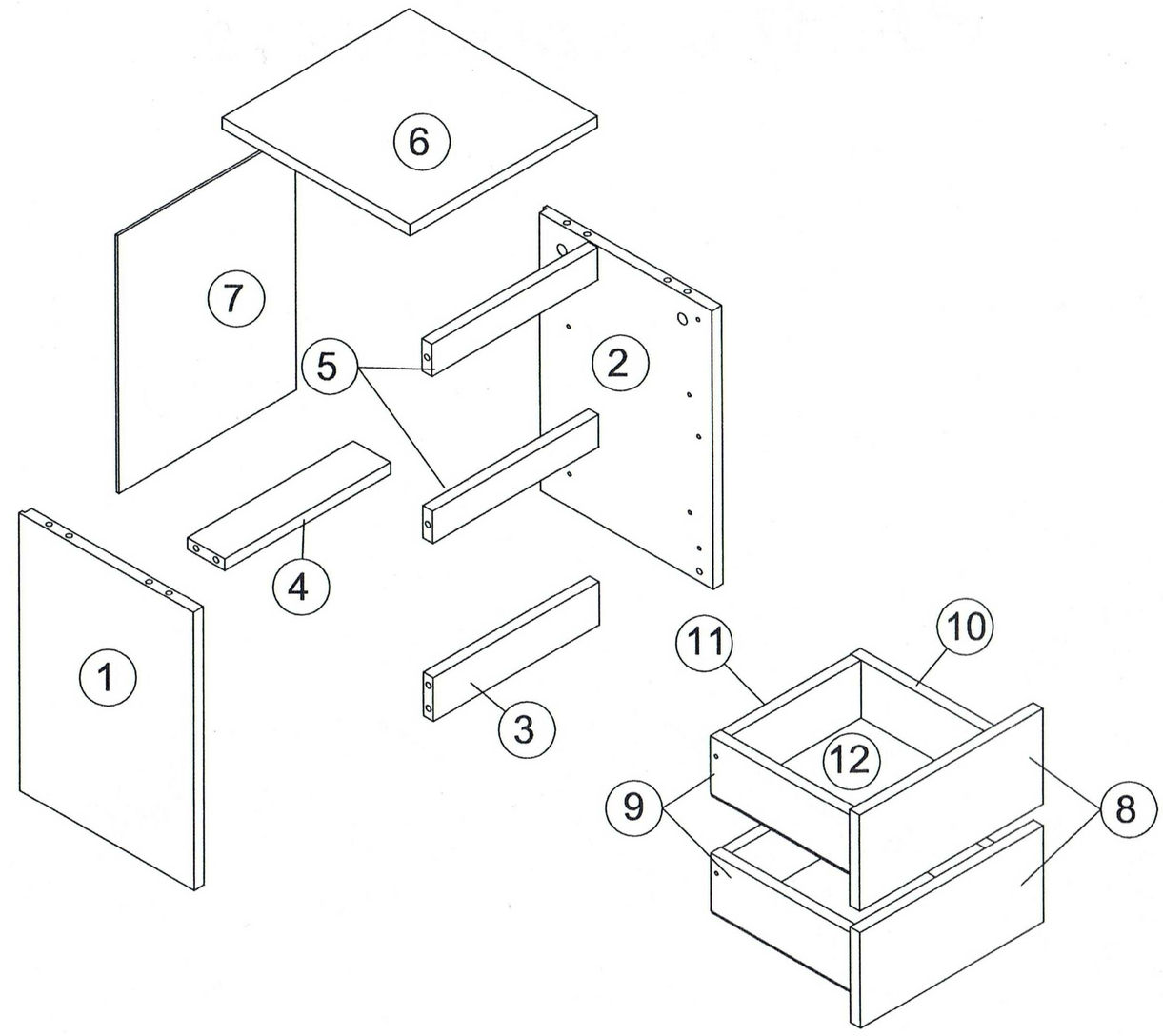
6
7
5
2
4
1
3
11
10
12
9
8

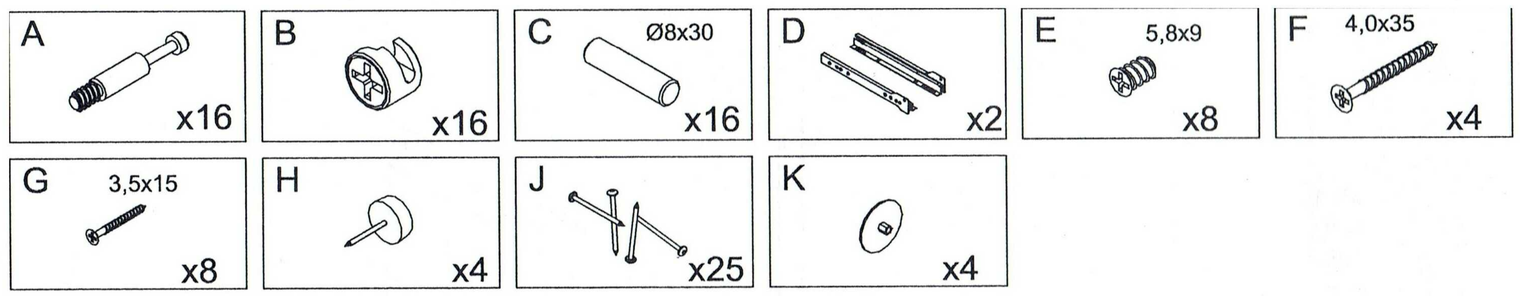
A x16
B x16
C Ø8x30 x16
D x2
E 5,8x9 x8
F 4,0x35 x4
G 3,5x15 x8
H x4
J x25
K x4

1

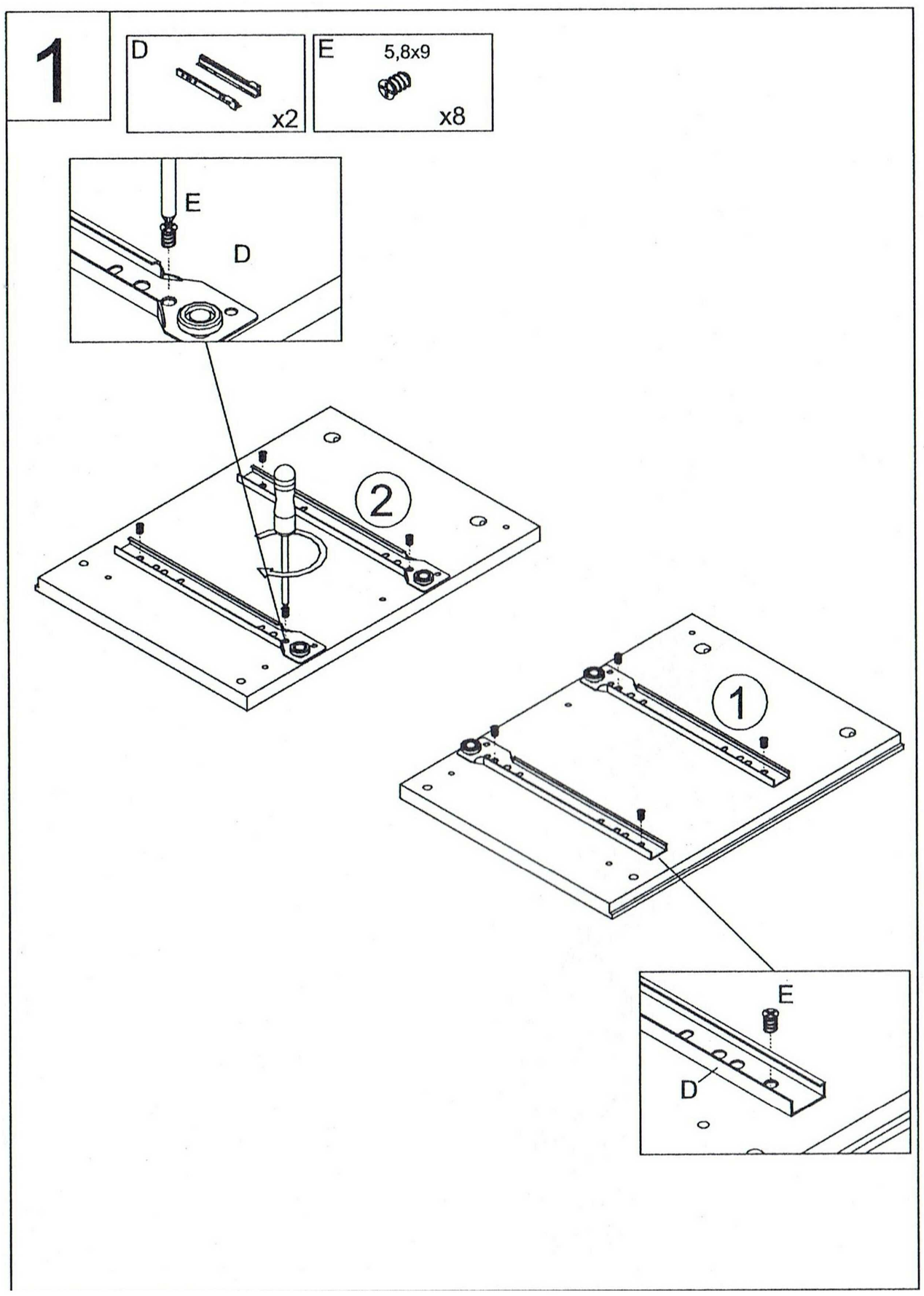
D x2
E 5,8x9 x8
E
D
2
1
E
D

2

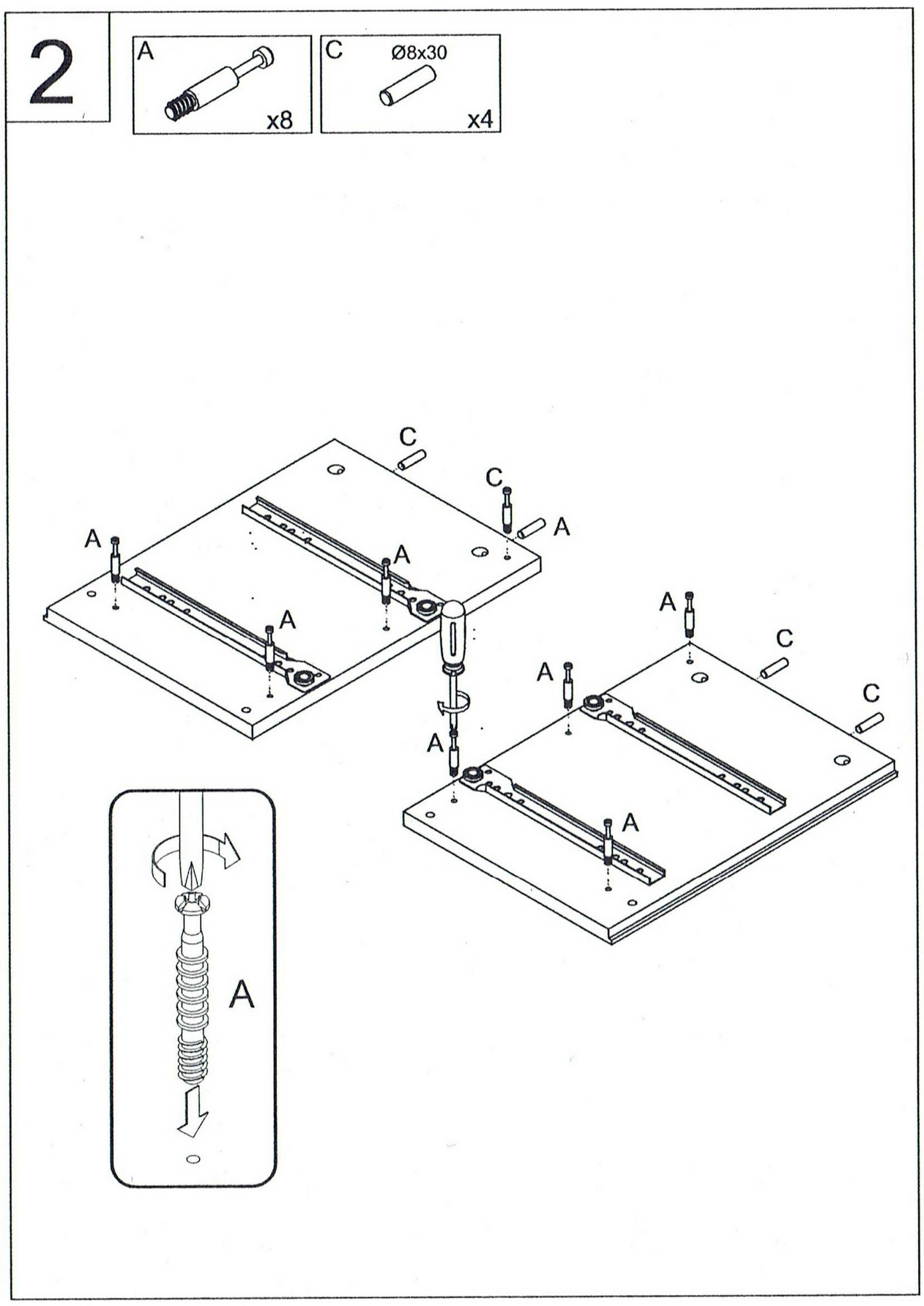
A x8
C Ø8x30 x4
C
C
A
A
A
A
A
C
C
A
A
A

3

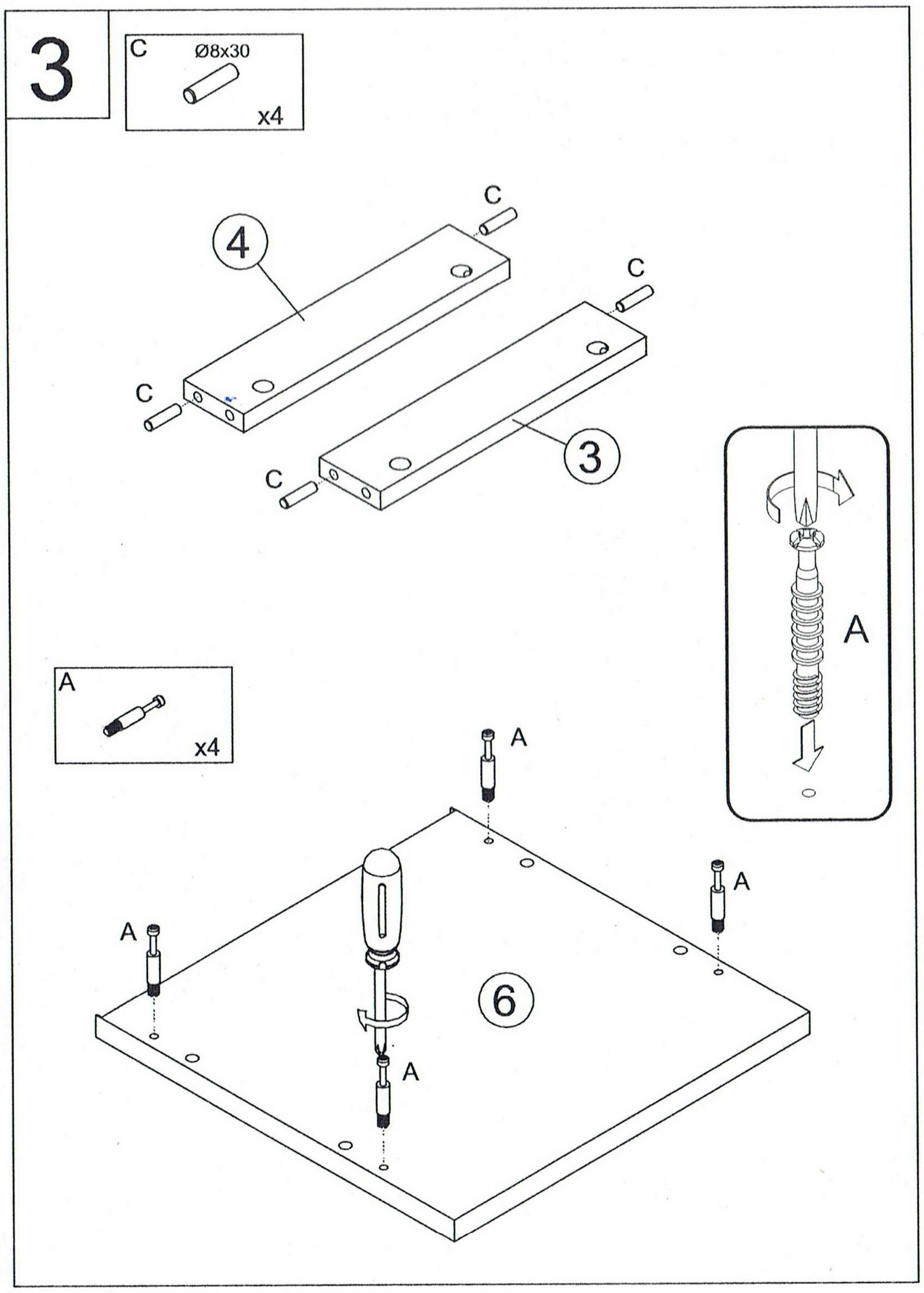
C
Ø8x30
x4
4
C
C
C
C
3
A
x4
A
A
A
A
6

4

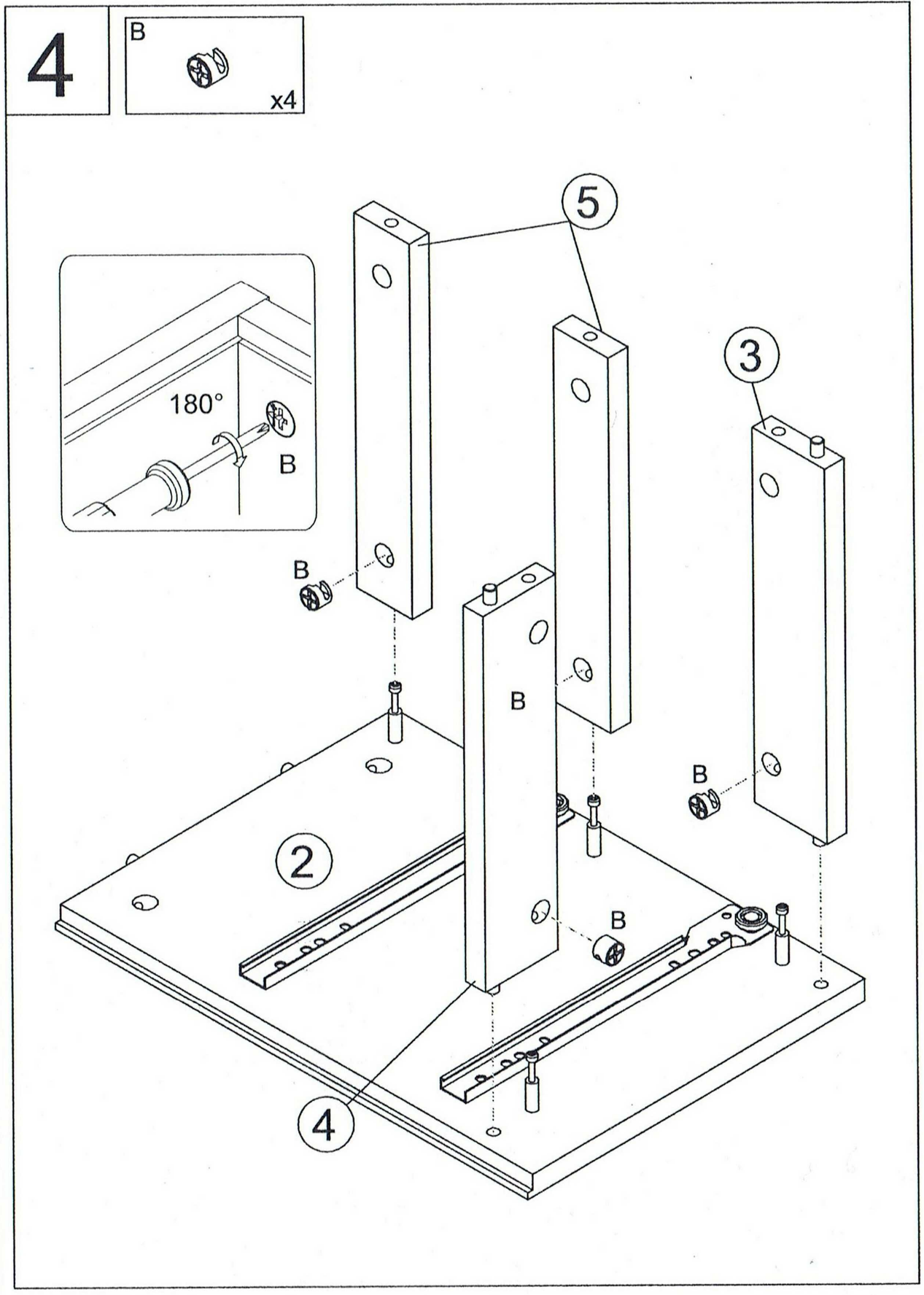
B
x4
5
180°
B
B
3
B
B
B
2
B
4

5

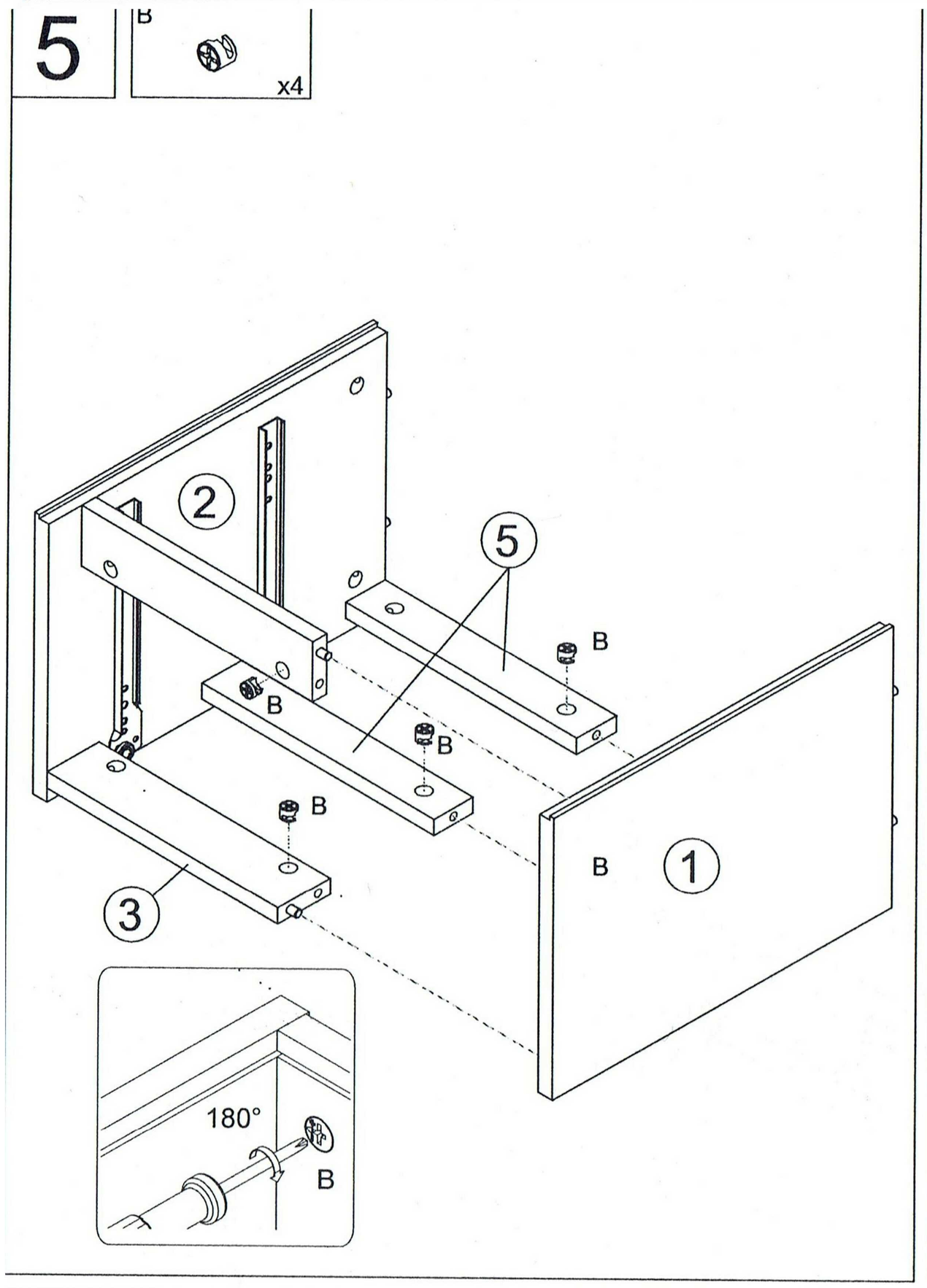
B
x4
2
5
B
B
B
B
B
1
3
180°
B

6

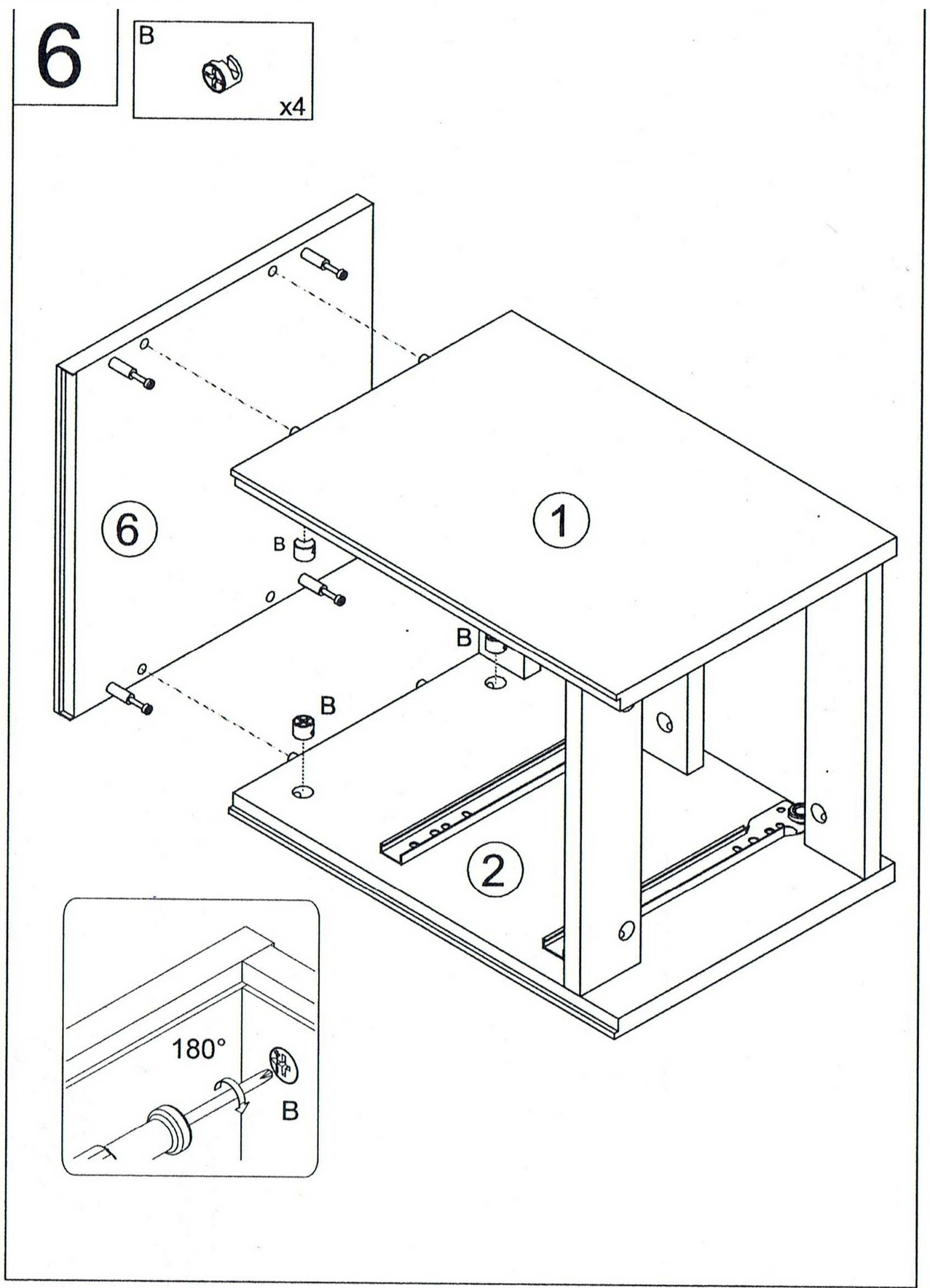
B
x4
6
1
B
B
B
2
180°
B

7

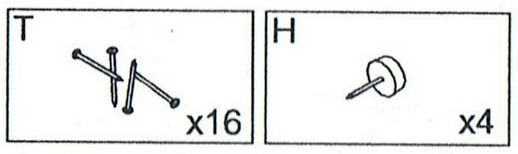
T
x16
H
x4

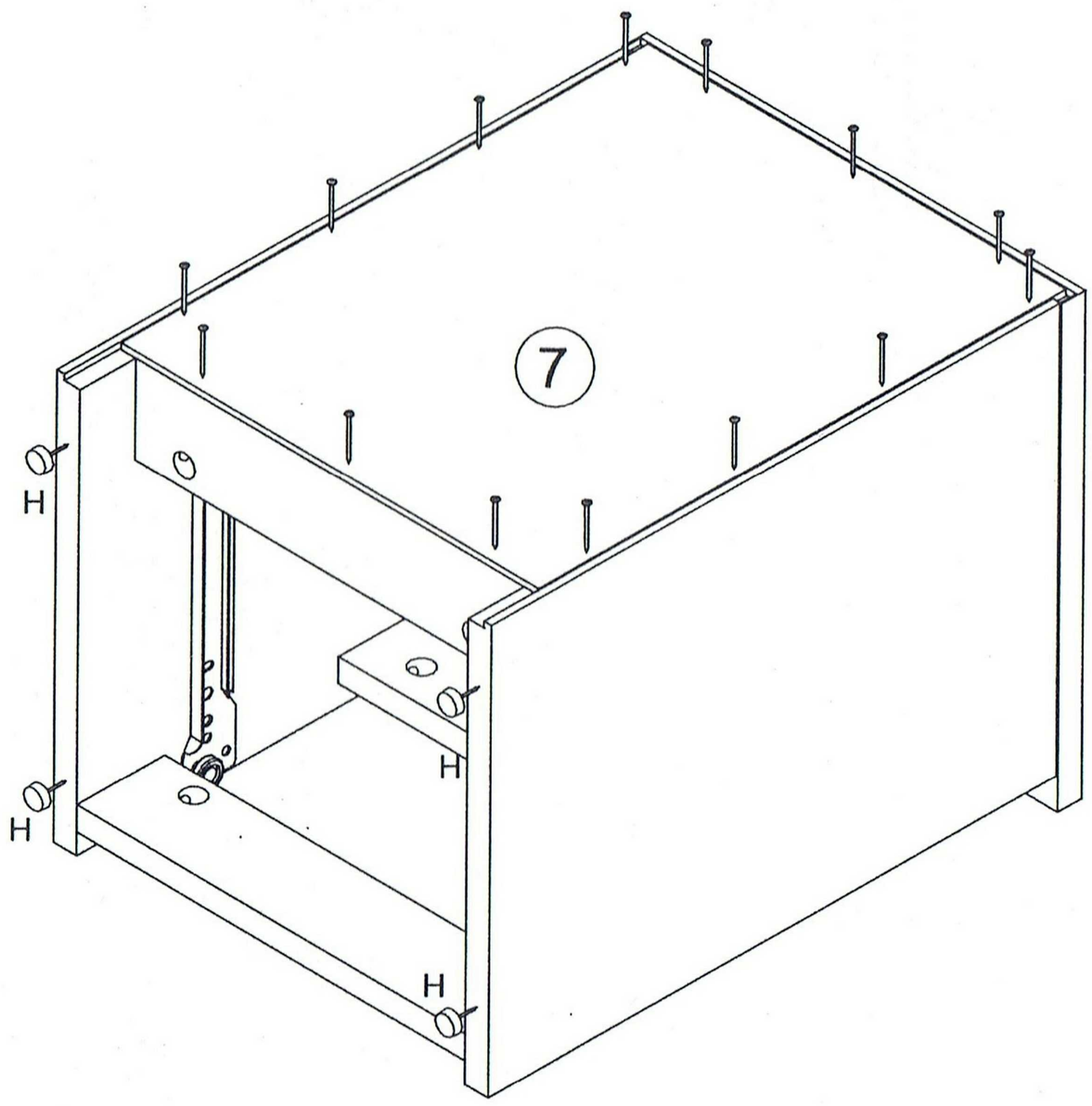
7
H
H
H
H

8

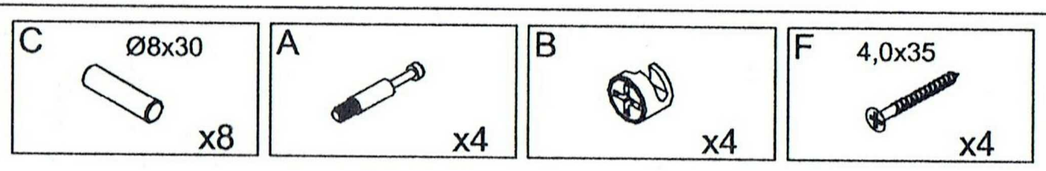
C
Ø8x30
x8
A
x4
B
x4
F
4,0x35
x4

x2

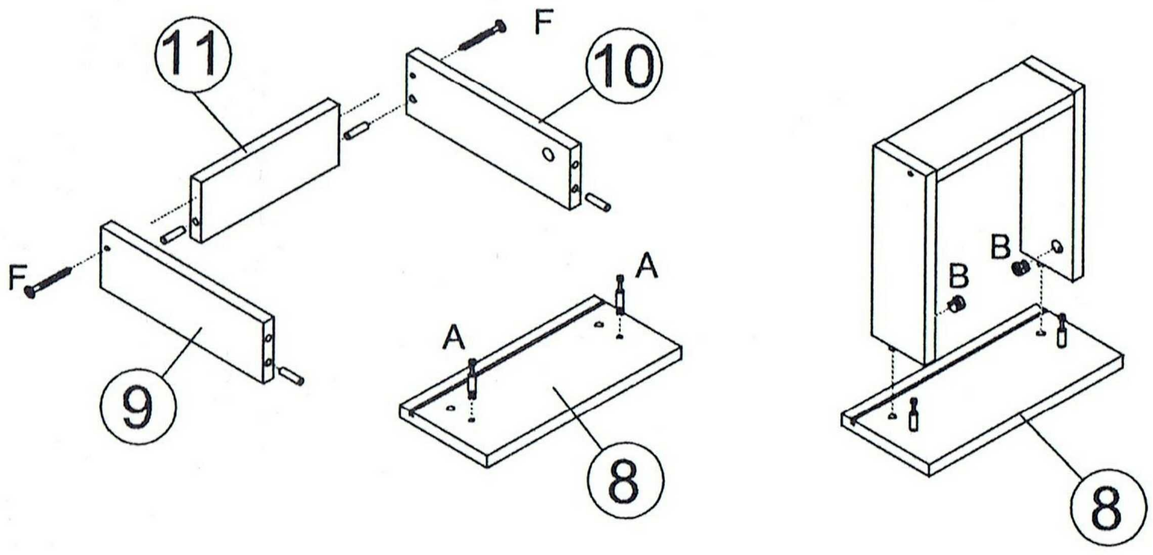
11
F
10
F
9
A
A
8
B
B
8

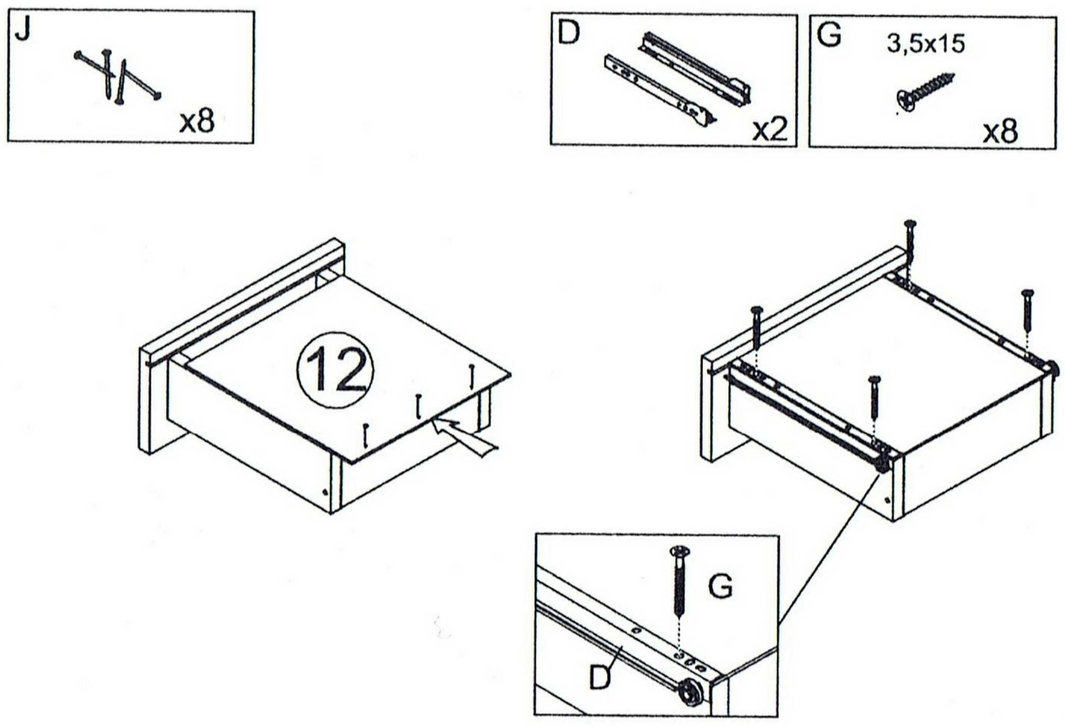
J
x8
D
x2
G
3,5x15
x8
12
G
D

9

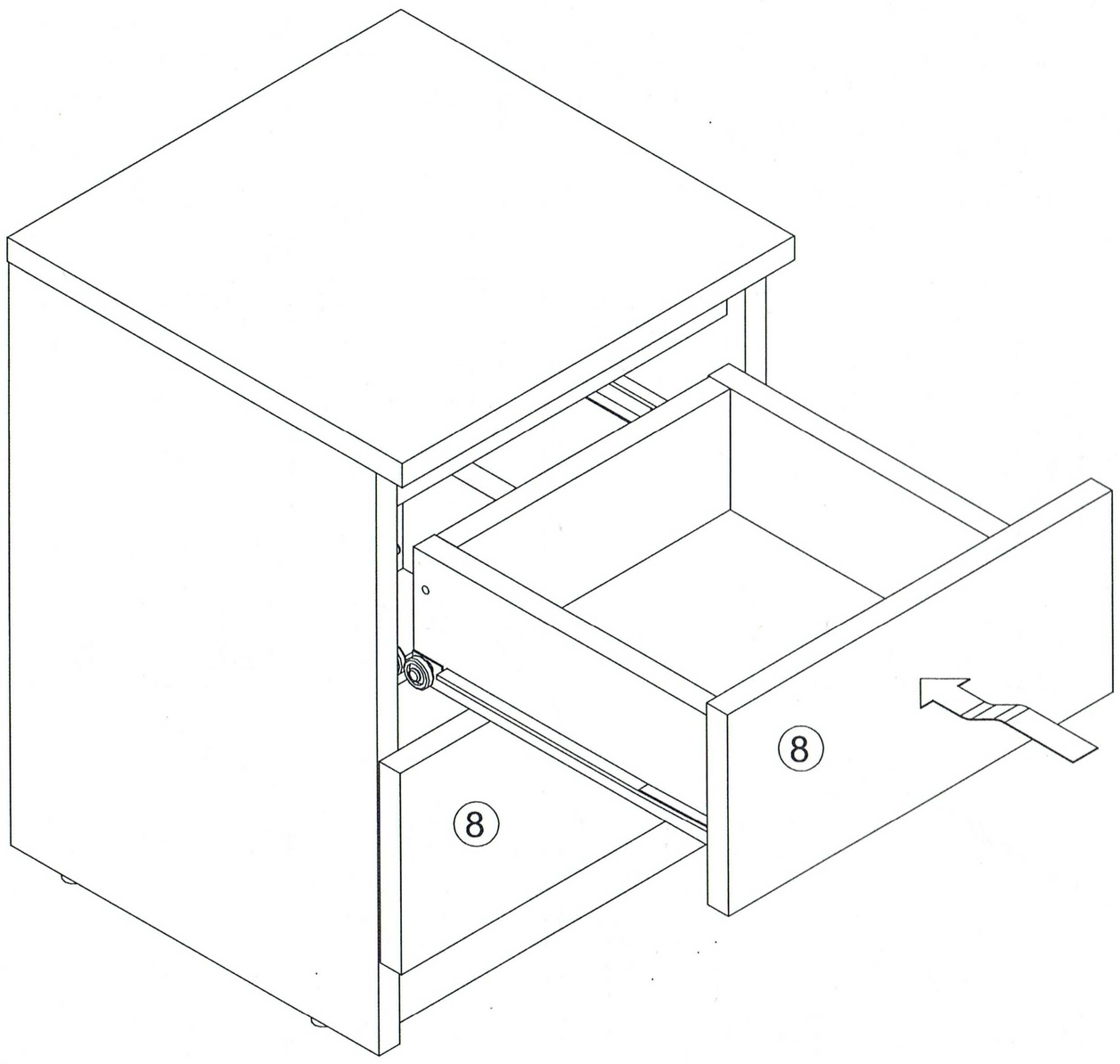
8
8