M3

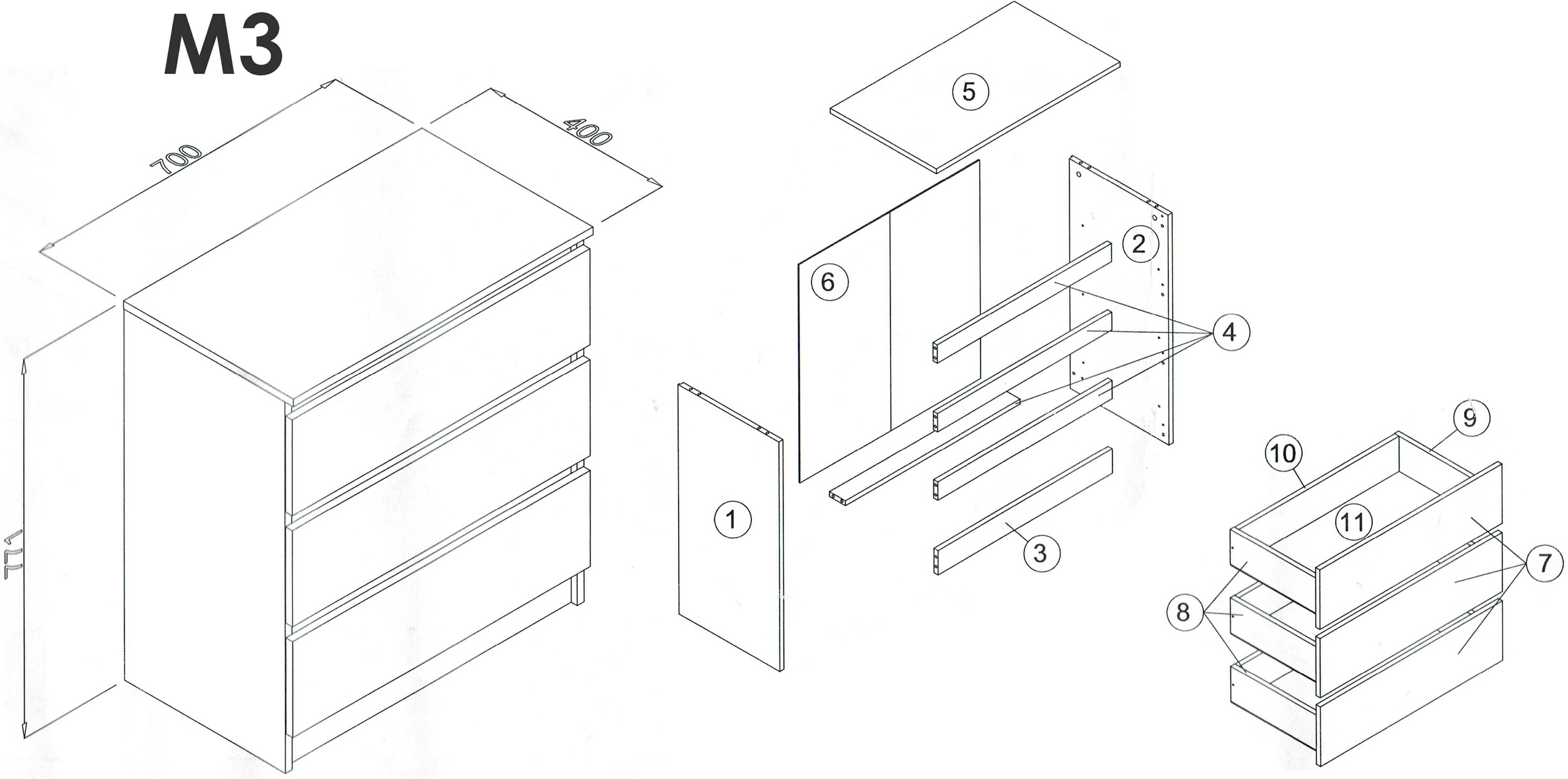
700
400
771
1
2
3
4
5
6
7
8
9
10
11

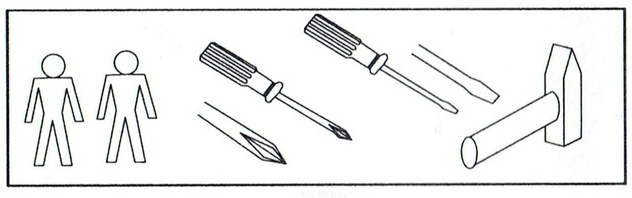

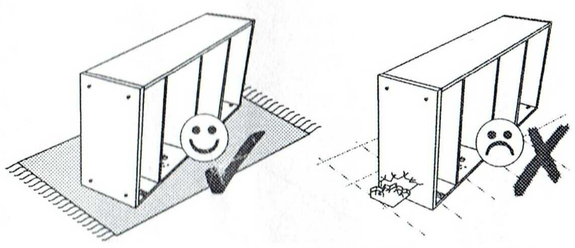

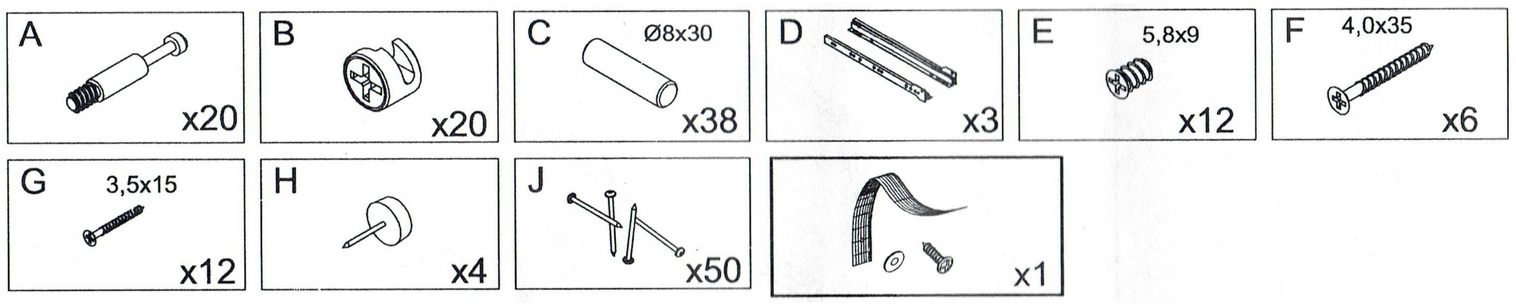
A x20
B x20
C Ø8x30 x38
D x3
E 5,8x9 x12
F 4,0x35 x6
G 3,5x15 x12
H x4
J x50
x1

1

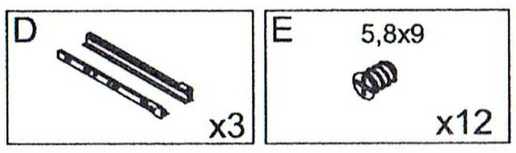
D x3
E 5,8x9 x12

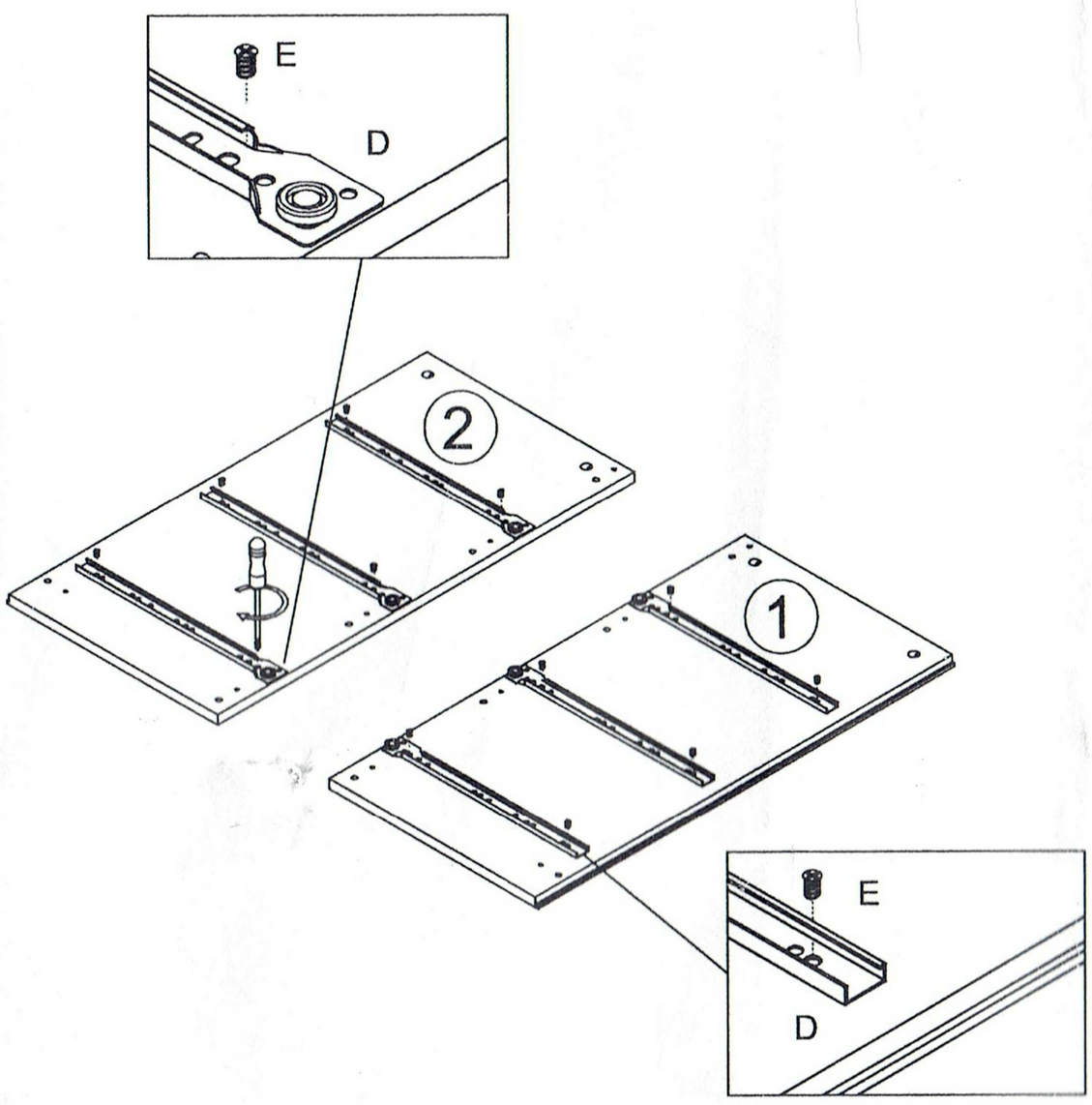
E
D
2
1
E
D

2

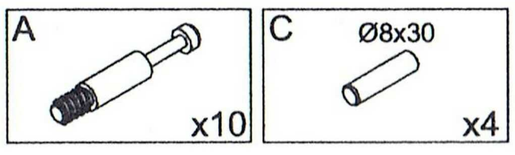
A x10
C Ø8x30 x4

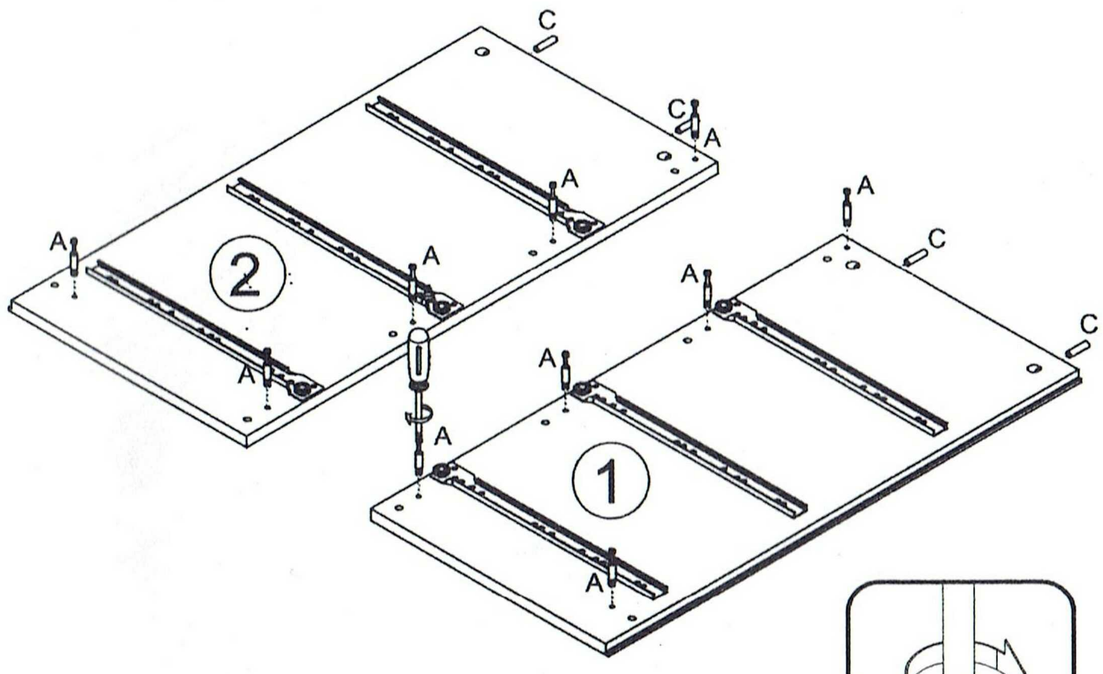
C
A
2
1

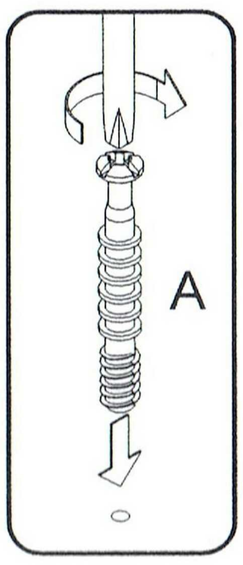
A

3

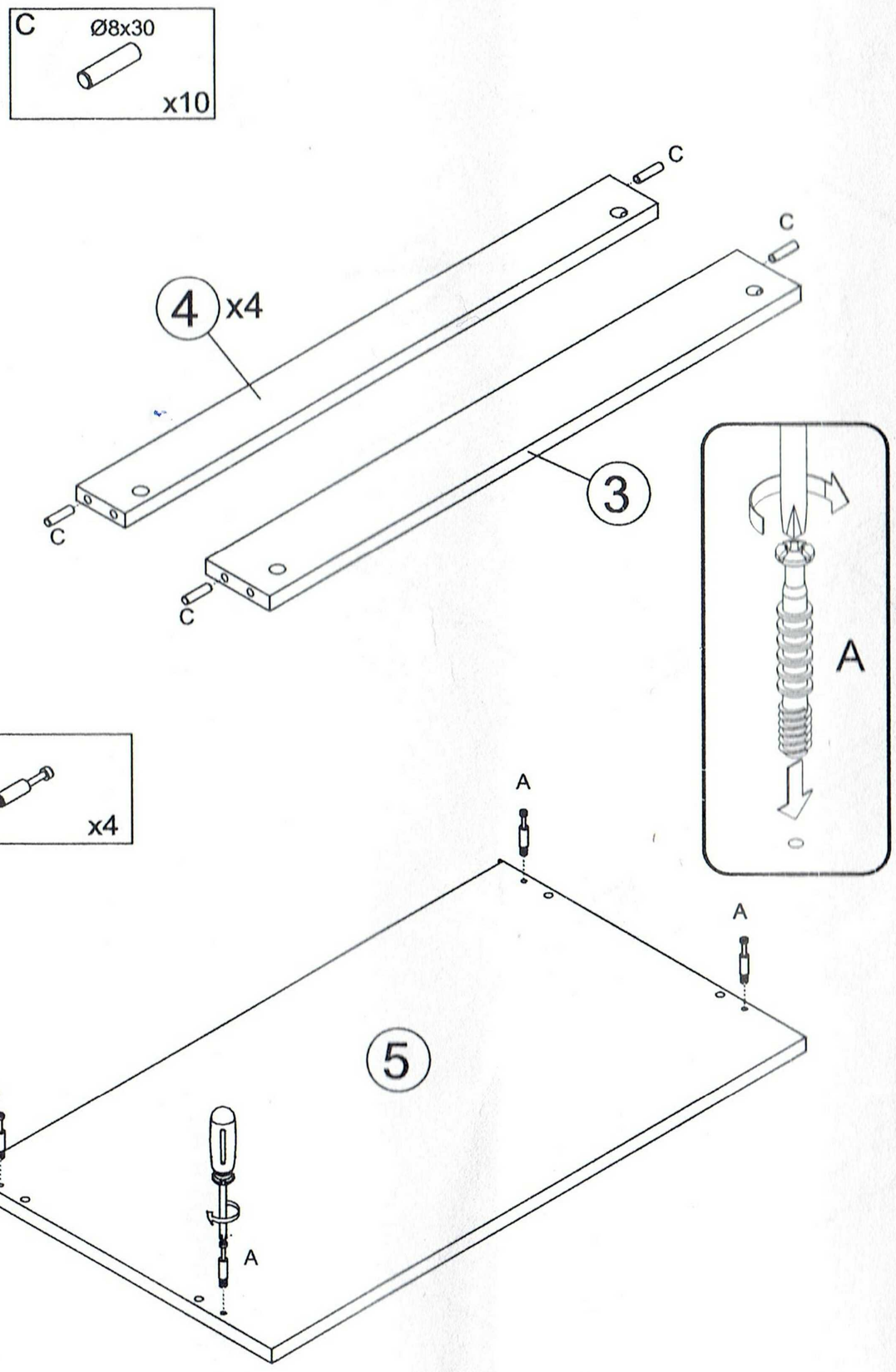

4

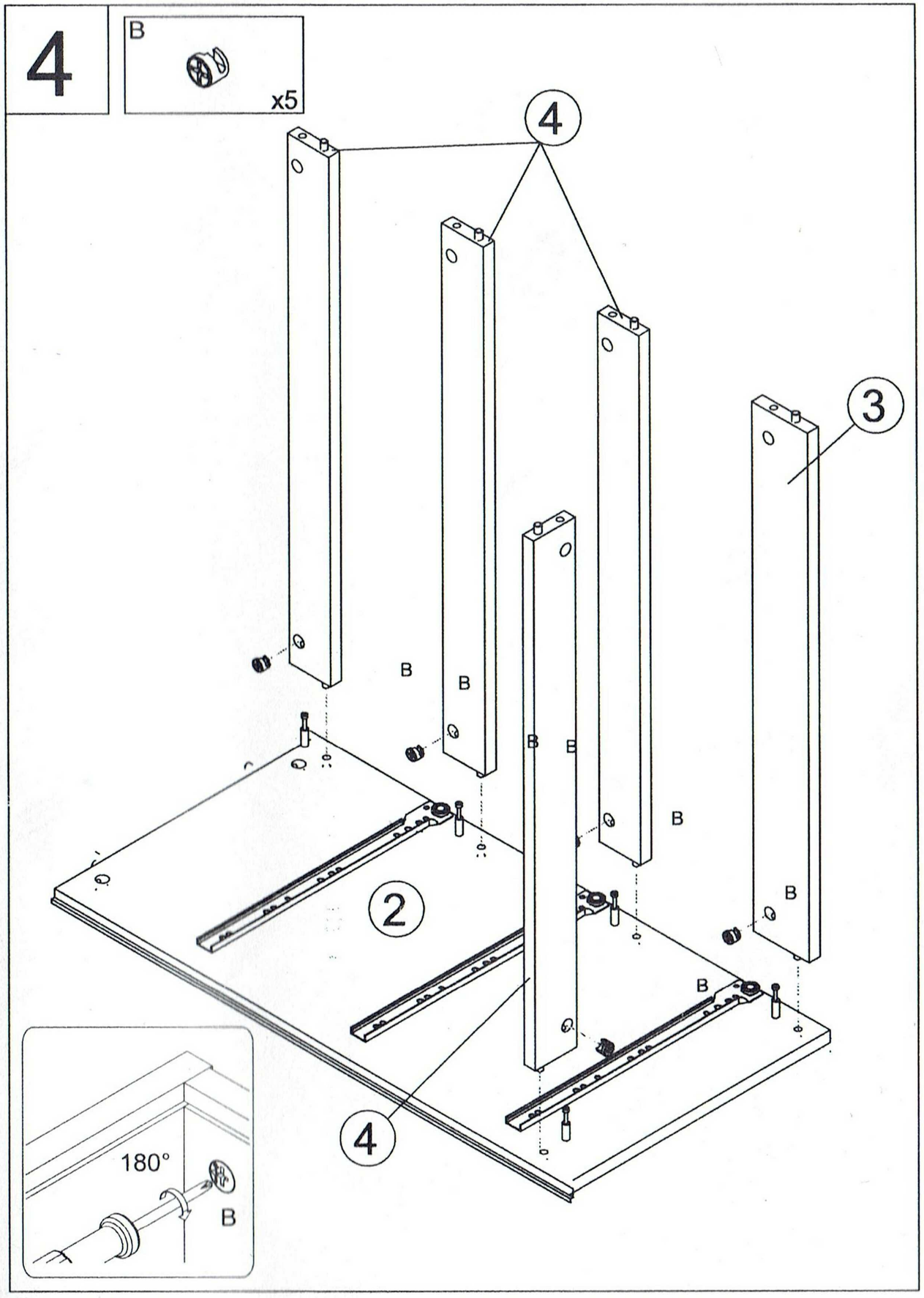

5

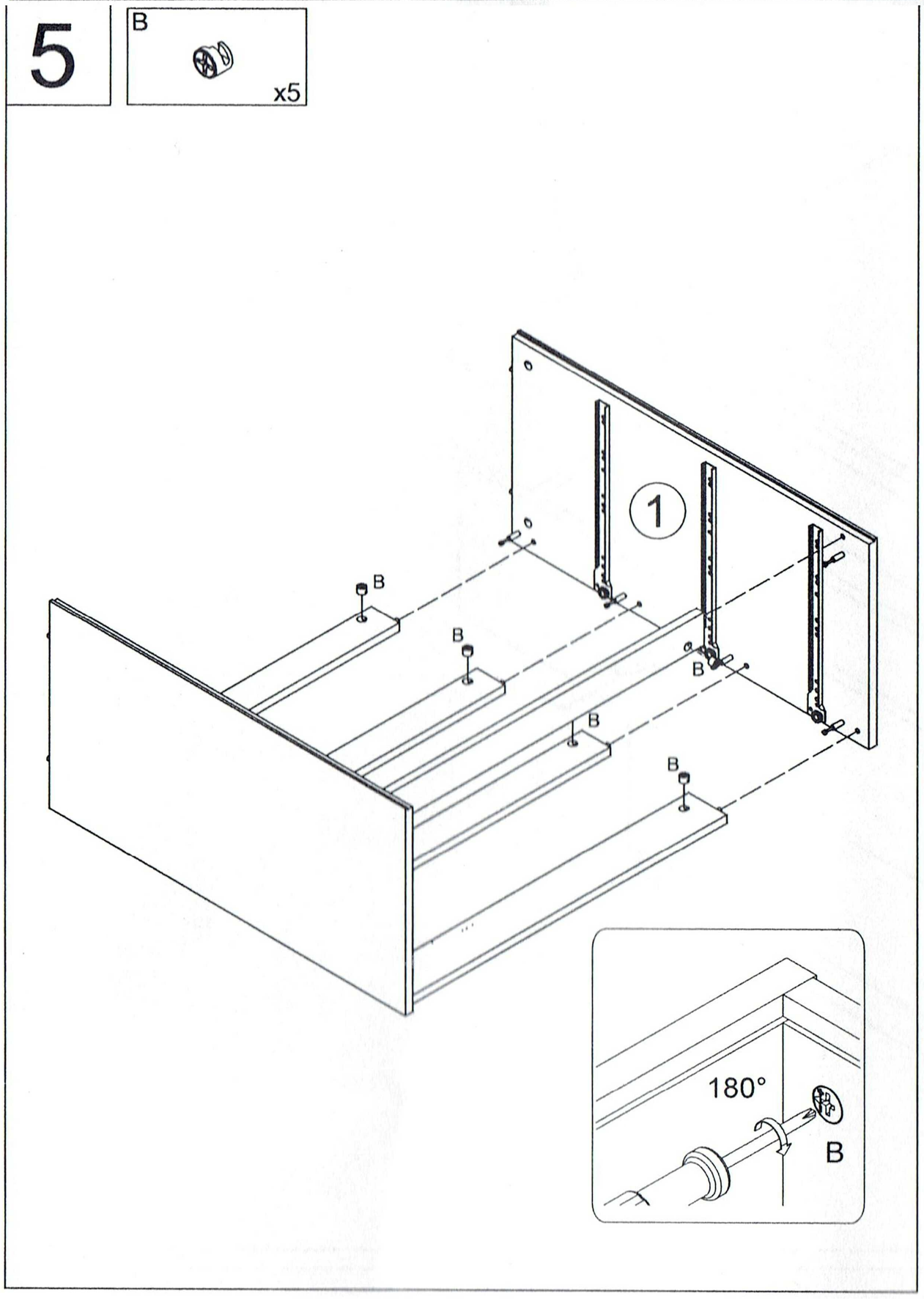

6

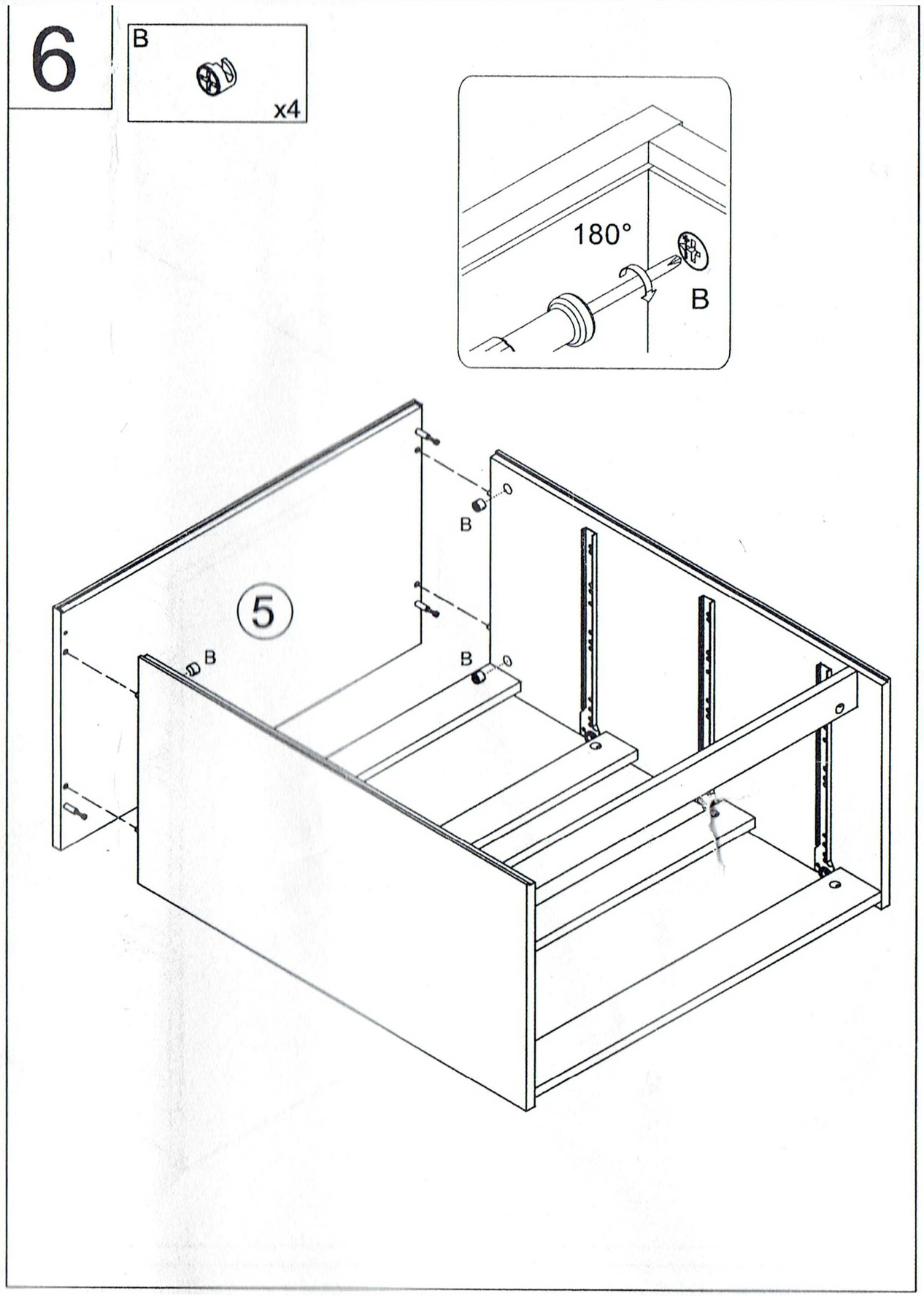

7

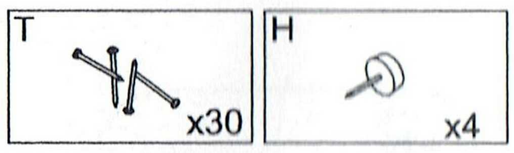
T
x30

H
x4

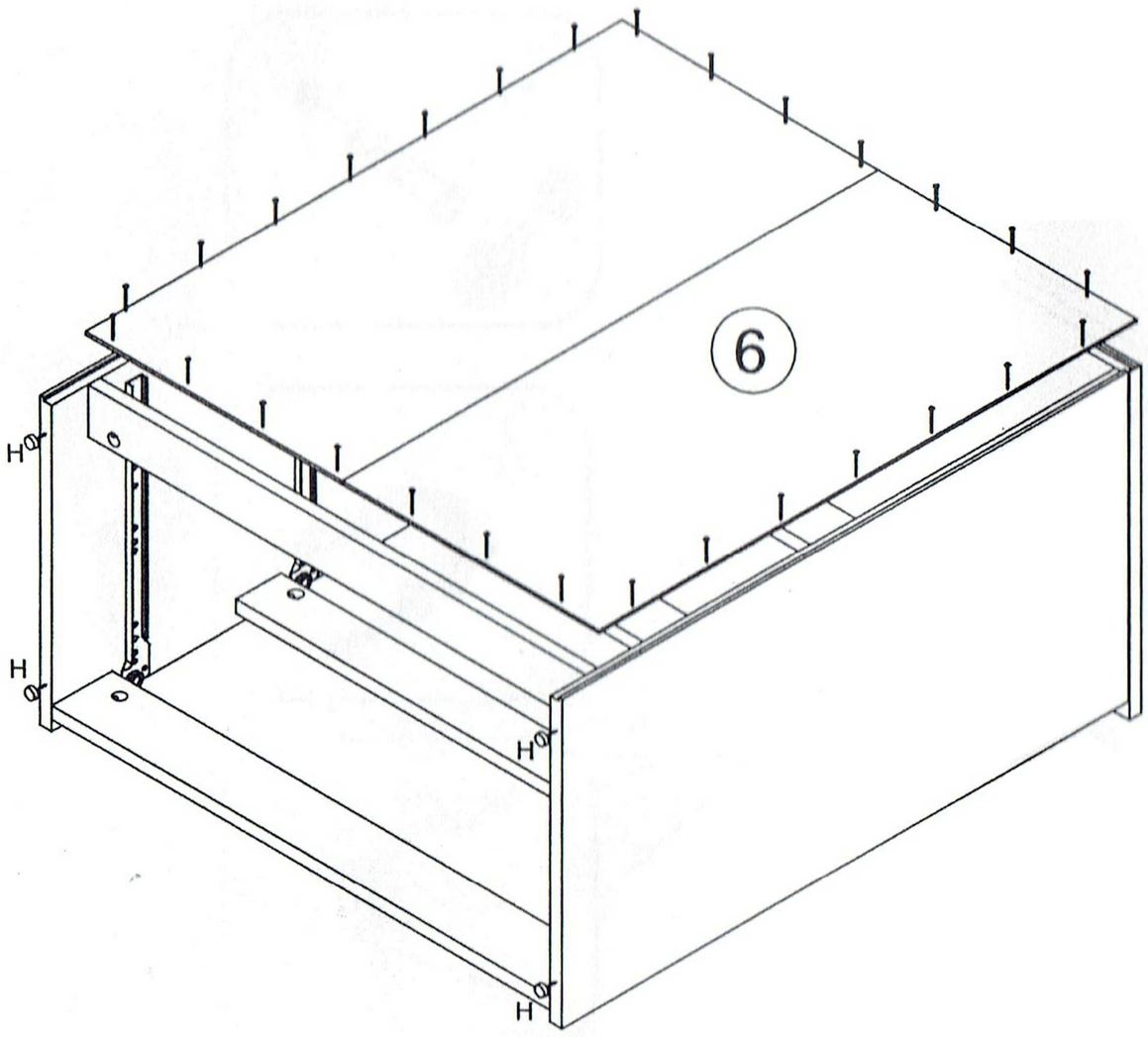
6
H
H
H
H

8

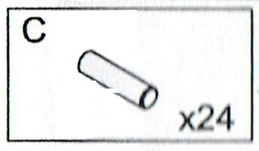
C
x24

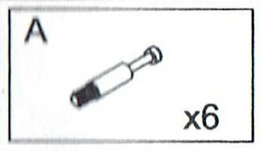
A
x6

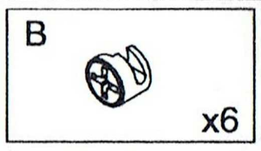
B
x6

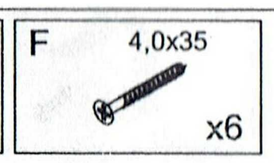
F
4,0x35
x6

x3

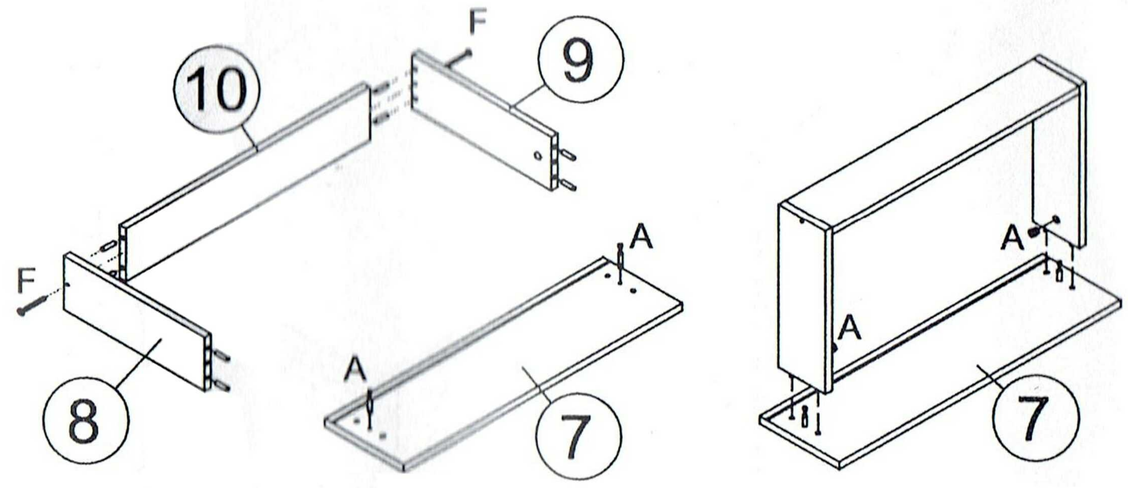
F
10
9
F
8
A
A
7
A
A
7

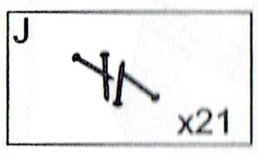
J
x21

D
x3

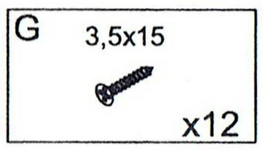
G
3,5x15
x12

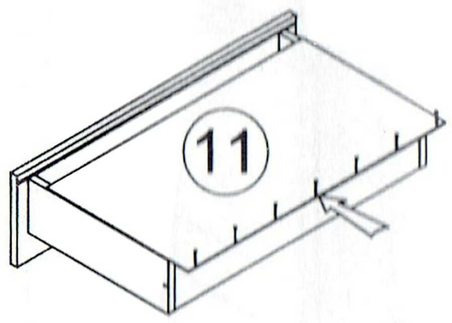
11

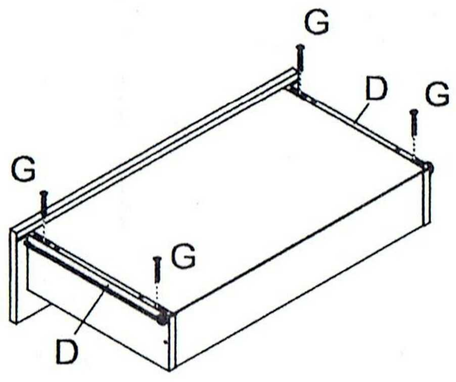
G
D
G
G
G
D

9

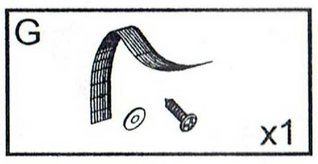
G
x1

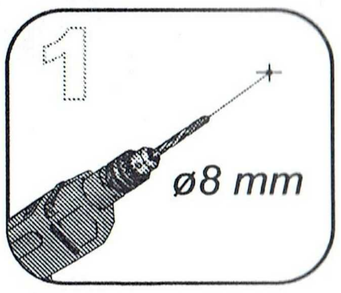
1
ø8 mm

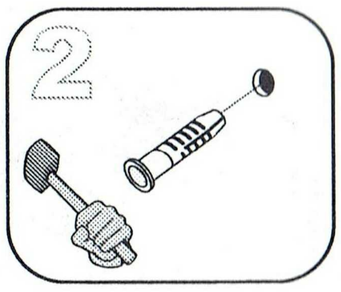
2

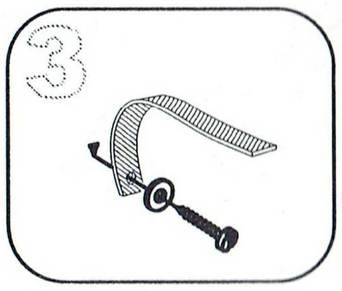
3

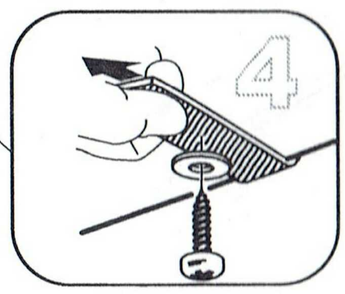
4

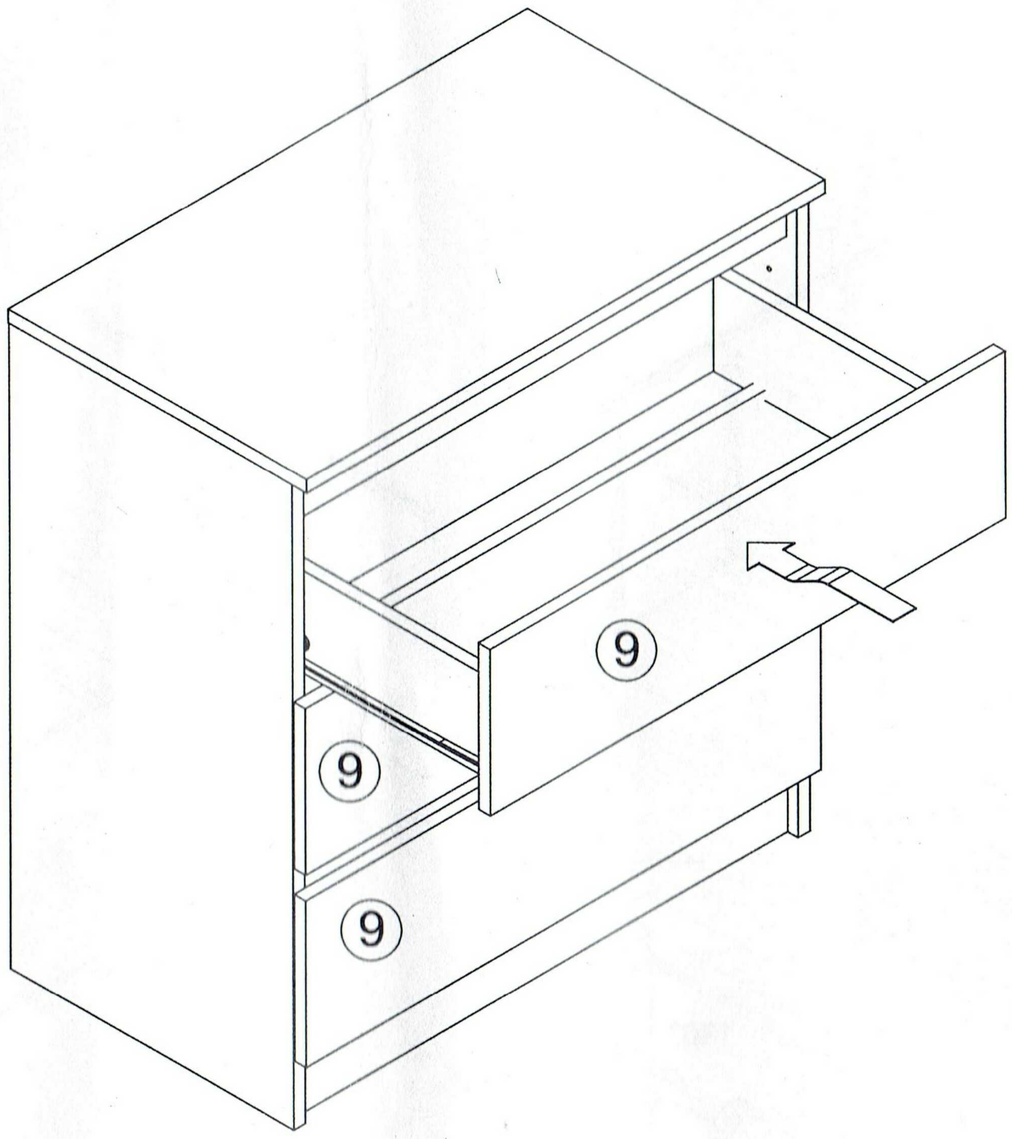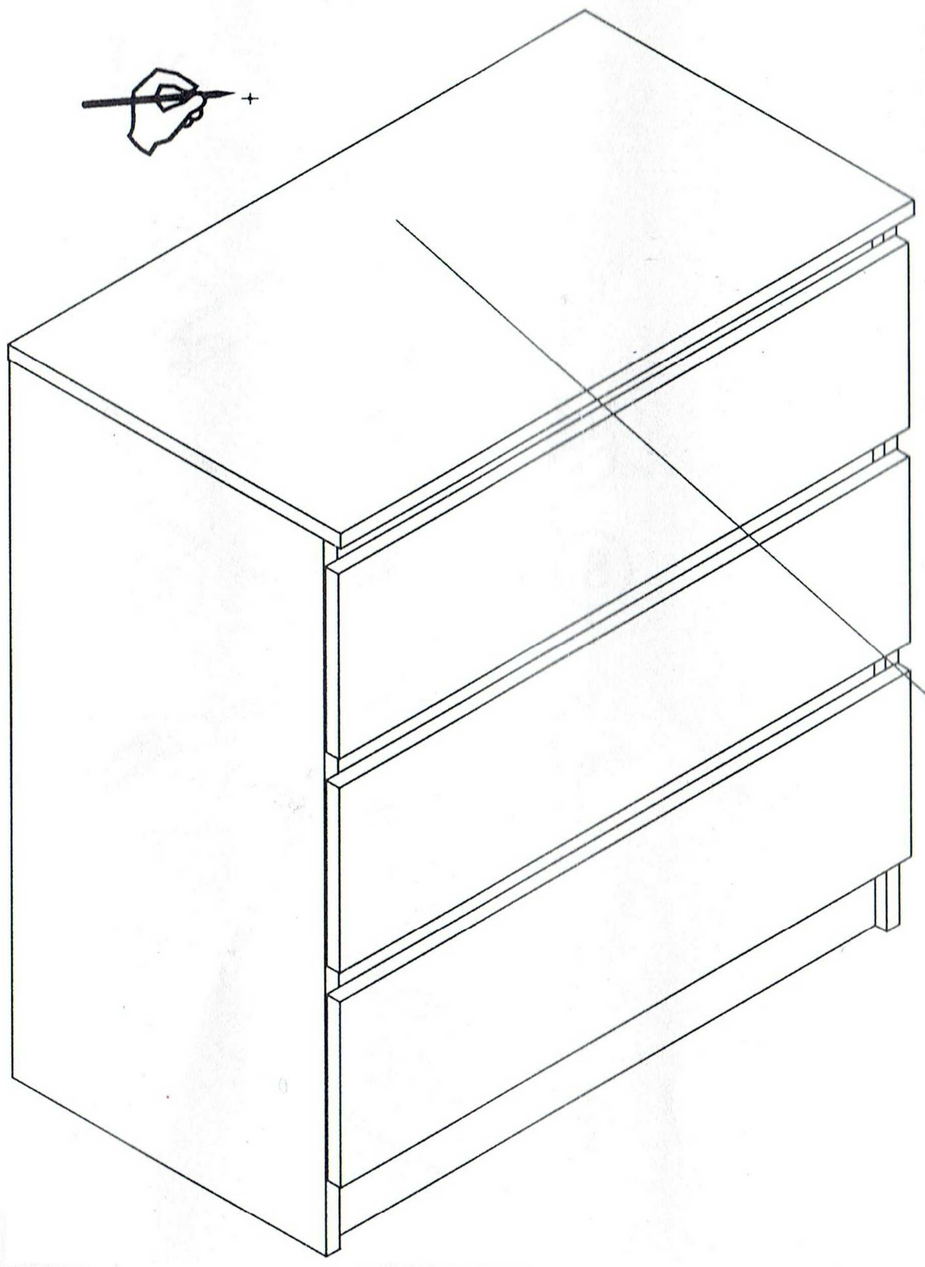
9
9
9