KALAX 1x4

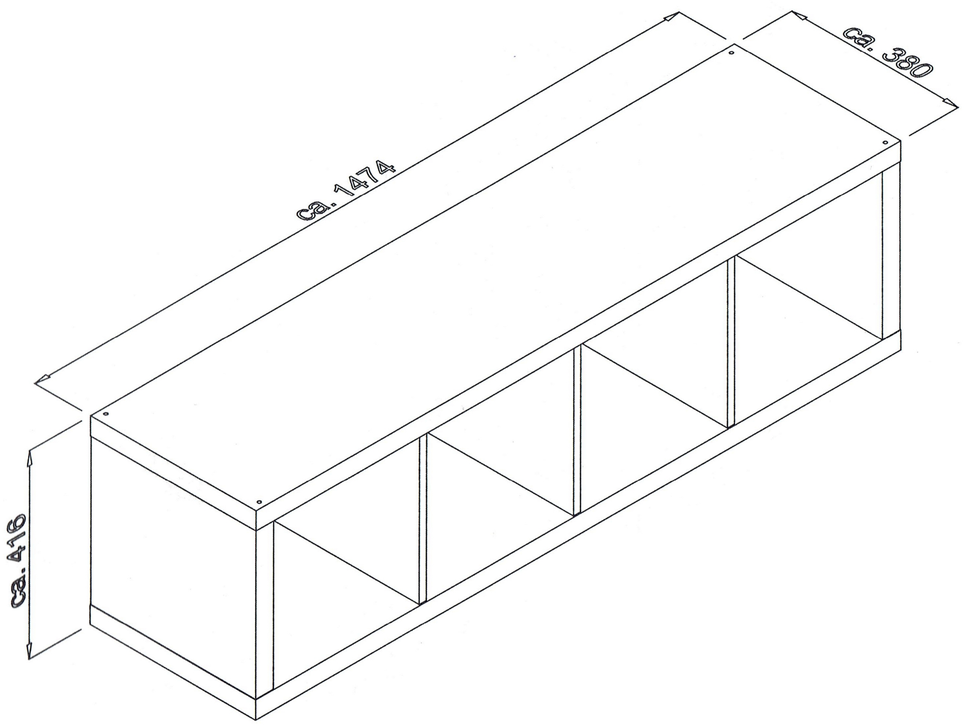

1	x2	ca. 1474 x 380 x 40
2	x2	ca. 336 x 378 x 40
3	x3	ca. 336 x 374 x 16

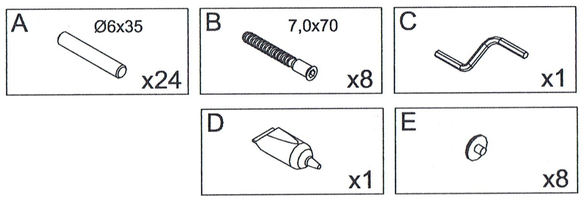

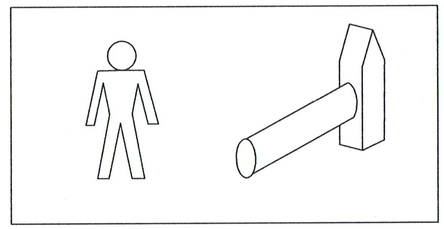

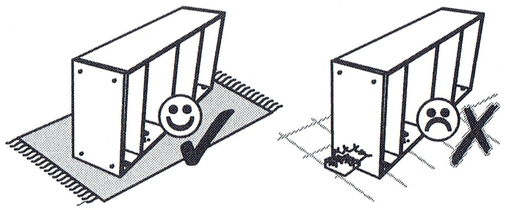

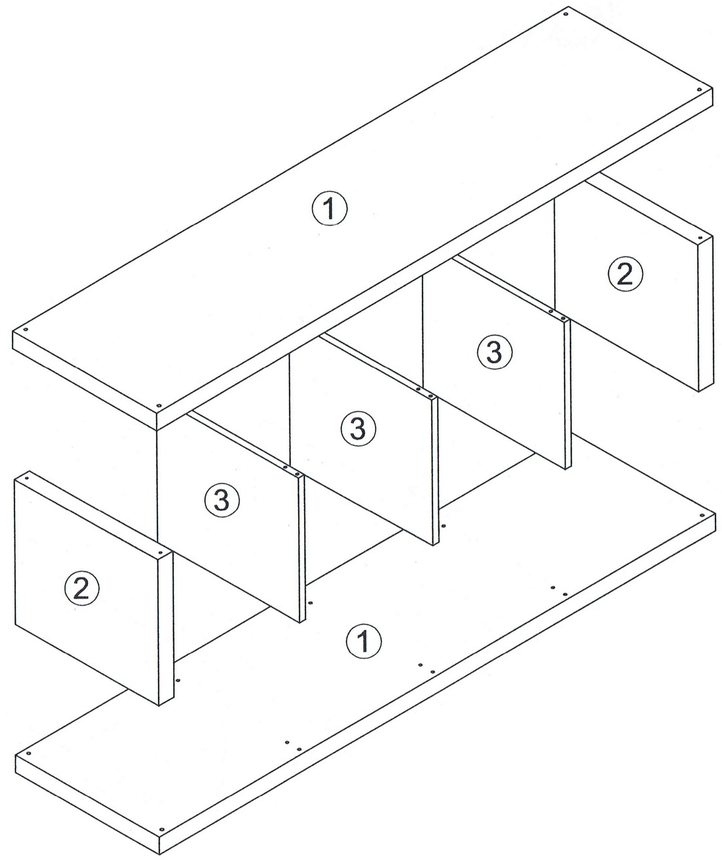

2

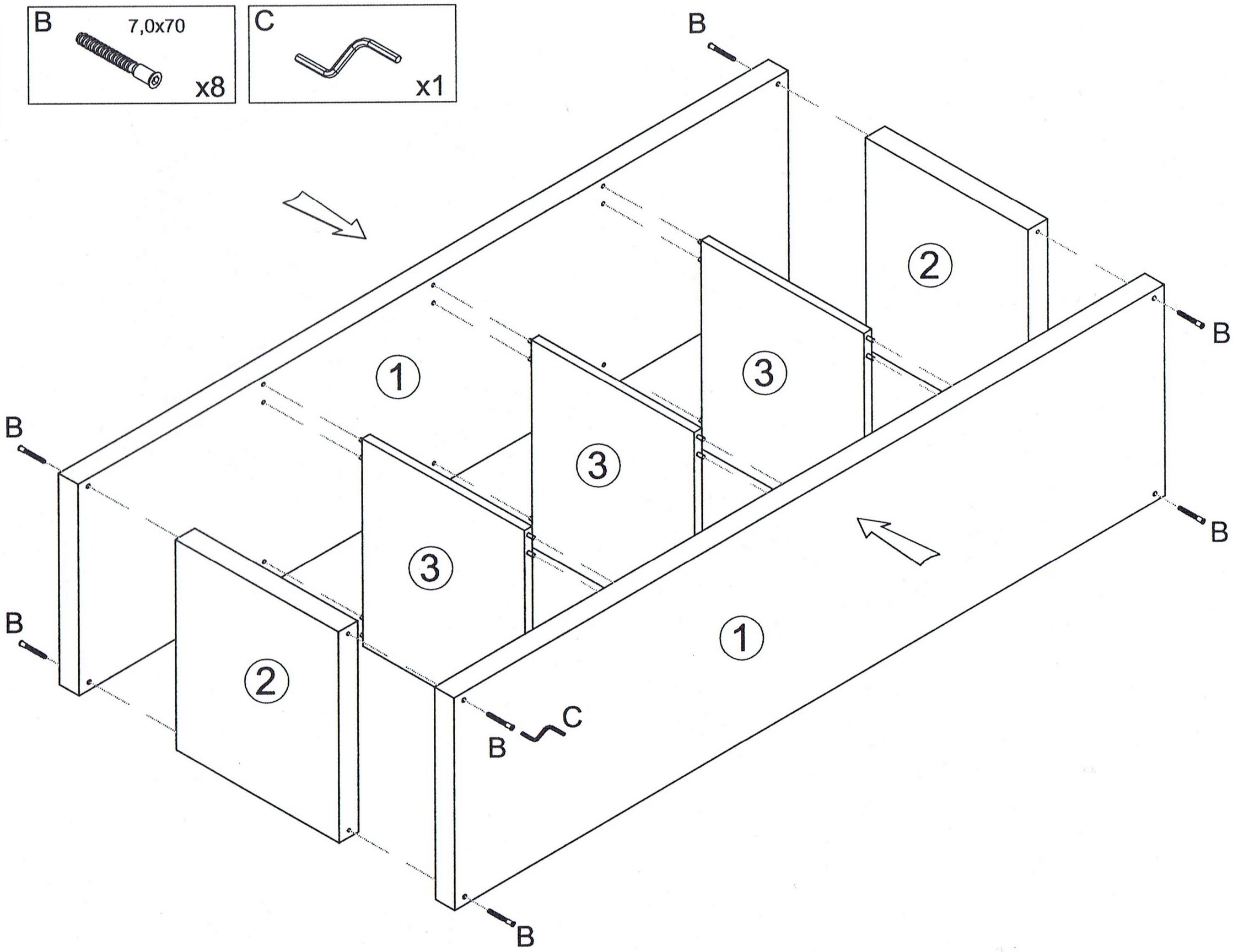
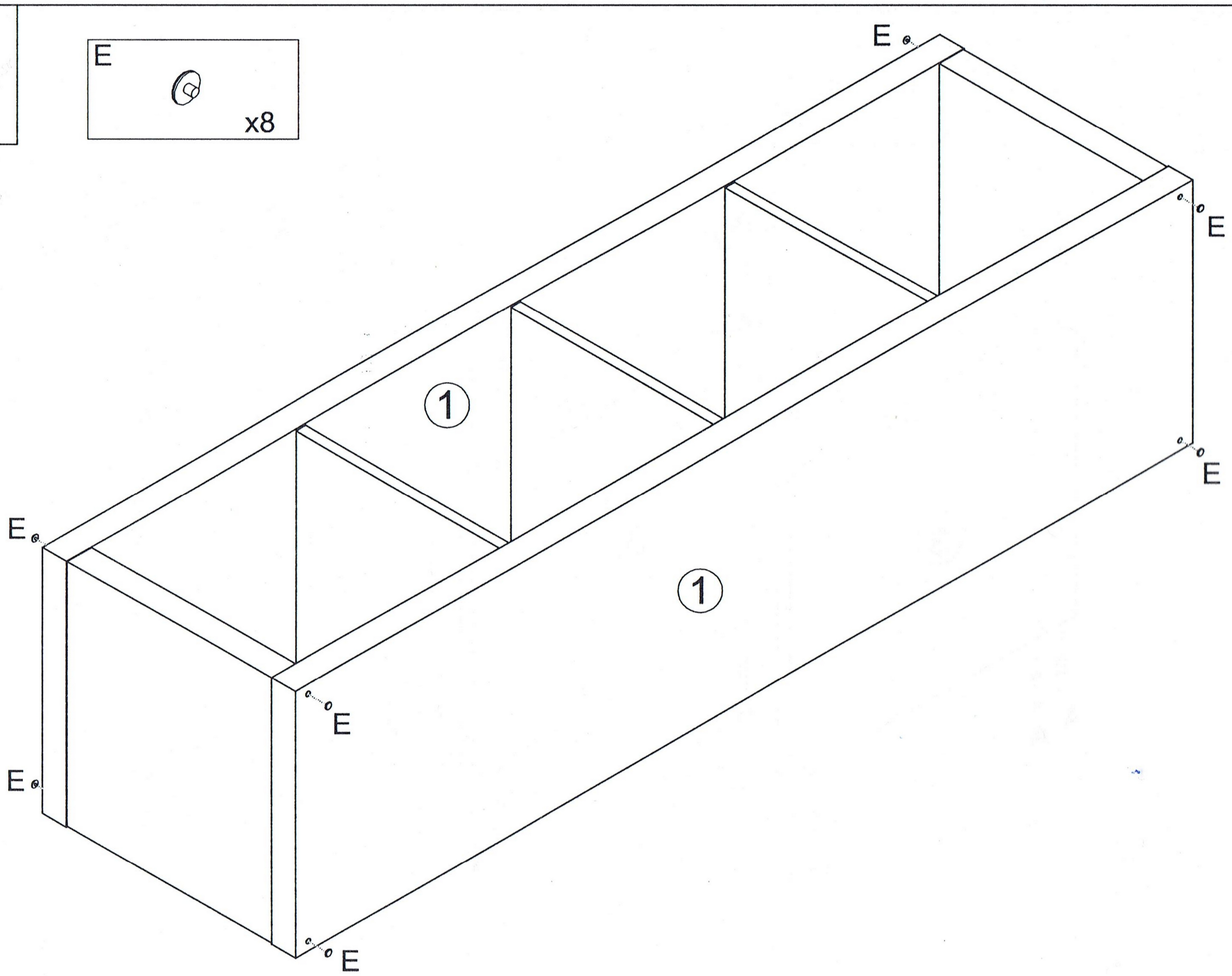
3