M5

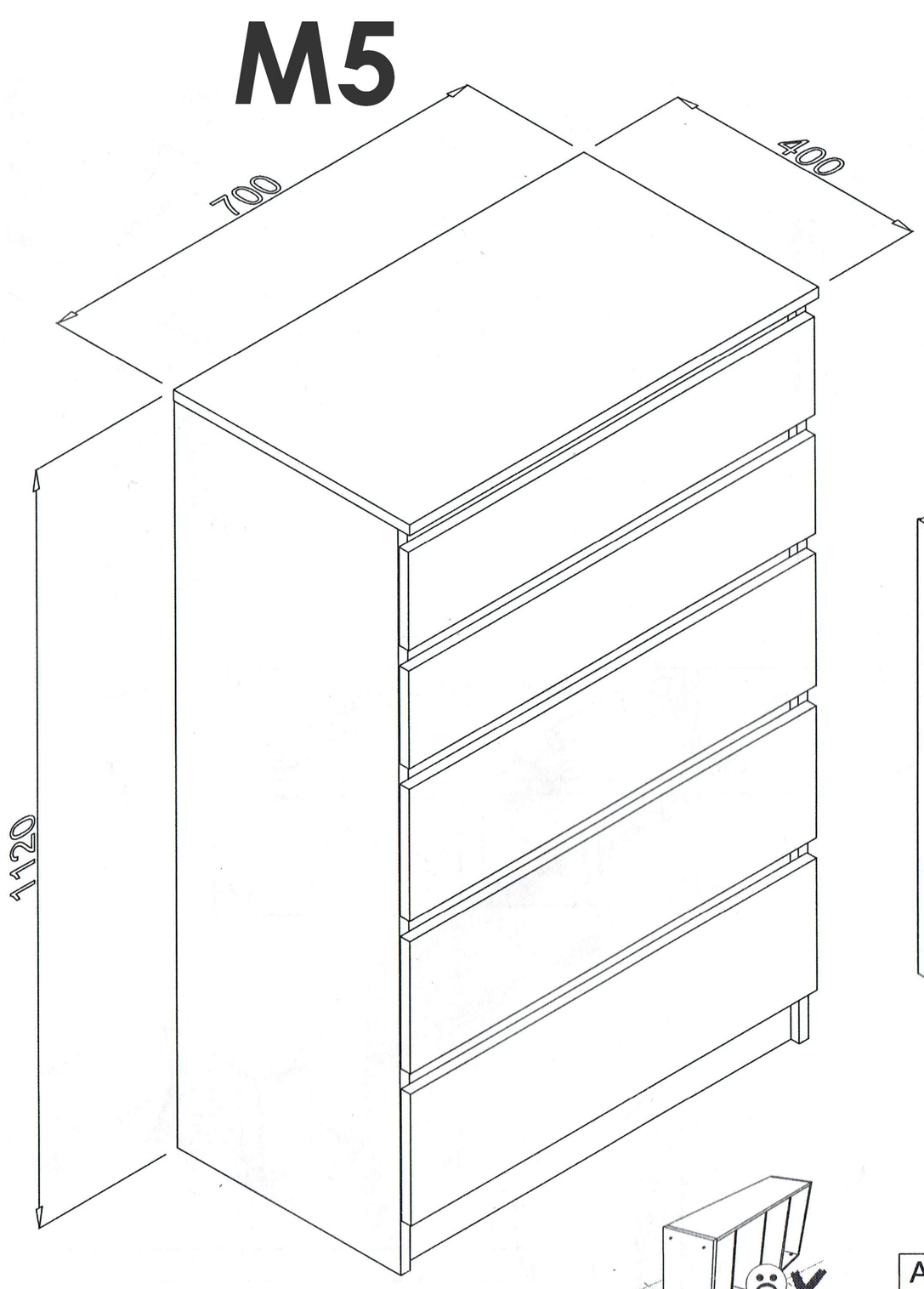
700
400
1120

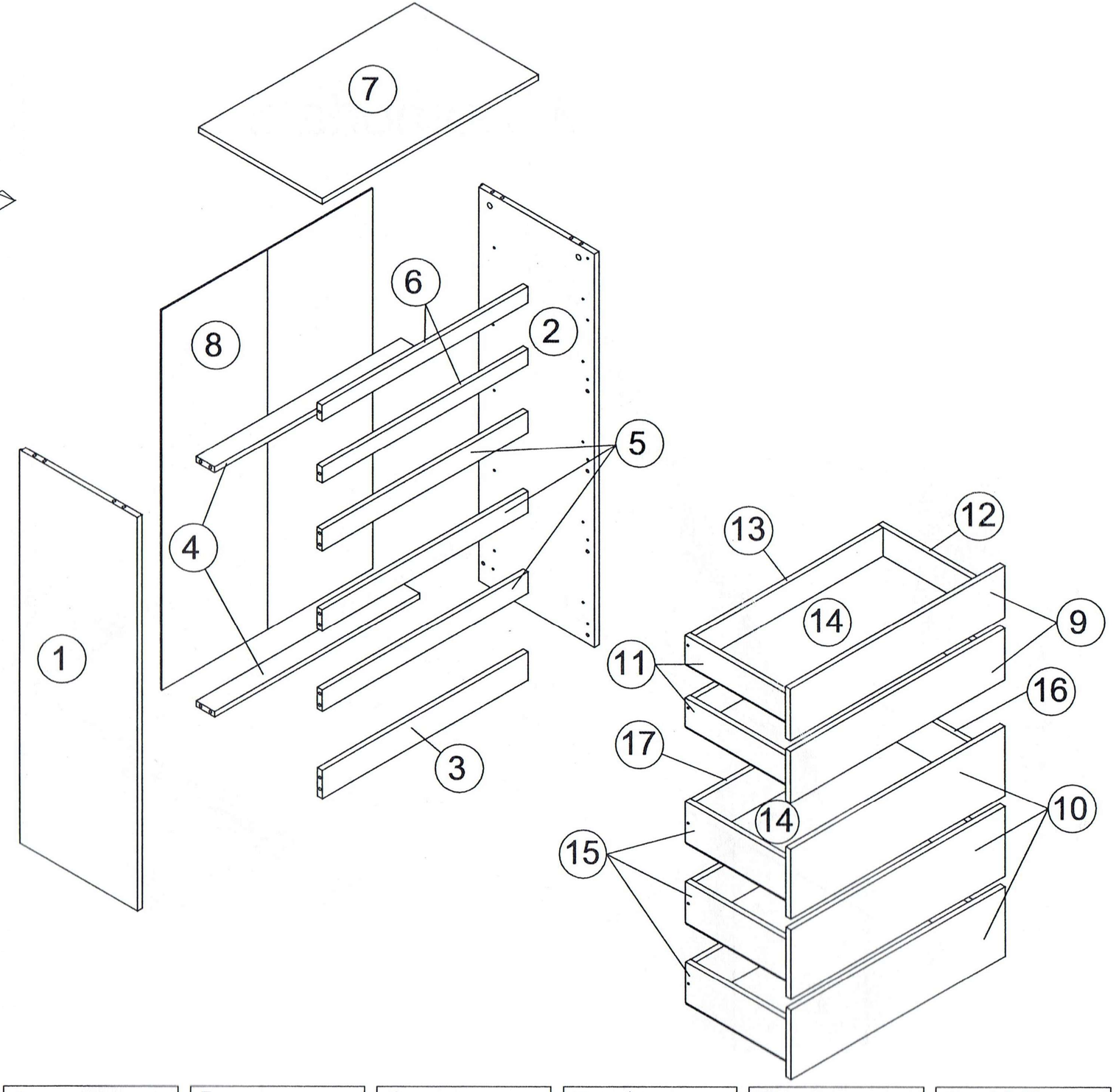
7
8
6
2
5
4
1
3
13
12
14
9
11
16
17
14
10
15

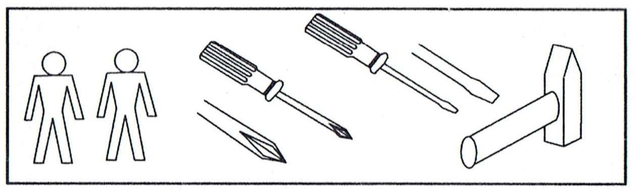

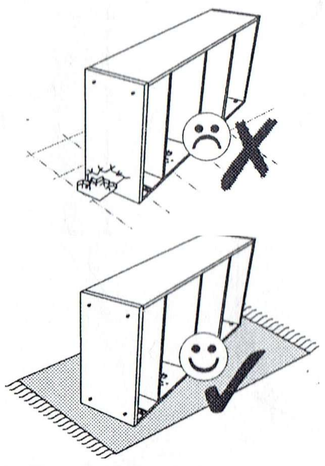

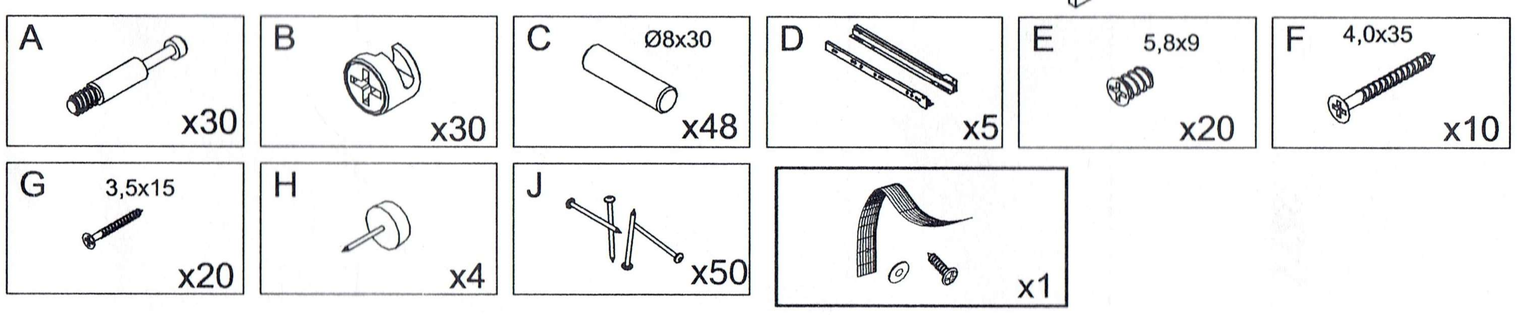
A
x30
B
x30
C
Ø8x30
x48
D
x5
E
5,8x9
x20
F
4,0x35
x10
G
3,5x15
x20
H
x4
J
x50
x1

1

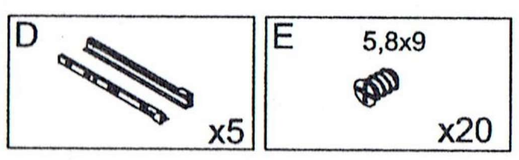
D
x5
E
5,8x9
x20

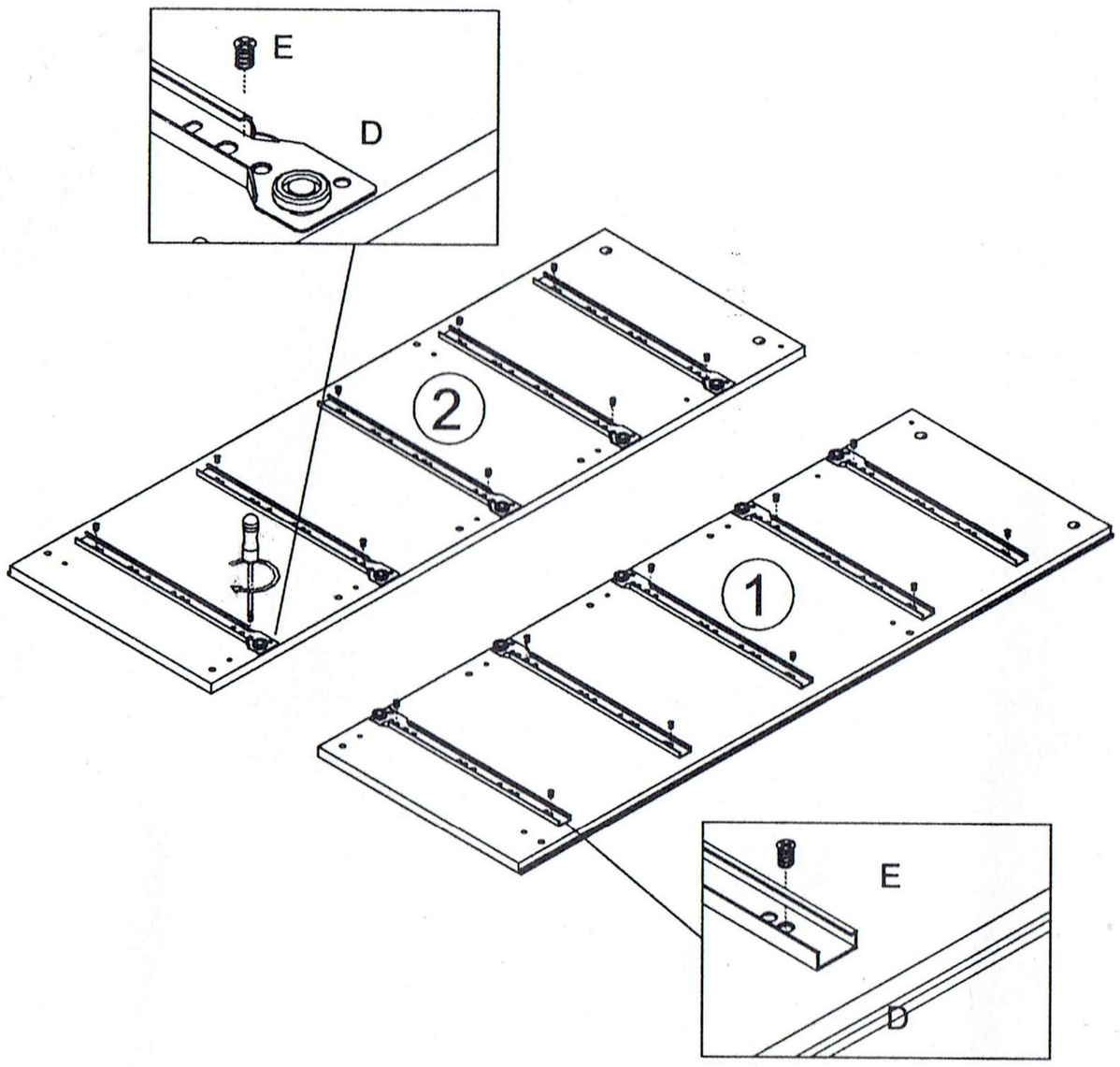
E
D
2
1
E
D

2

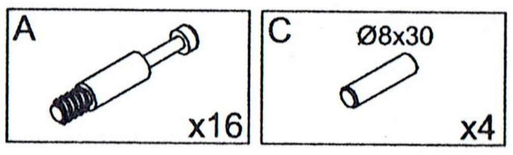
A
x16
C
Ø8x30
x4

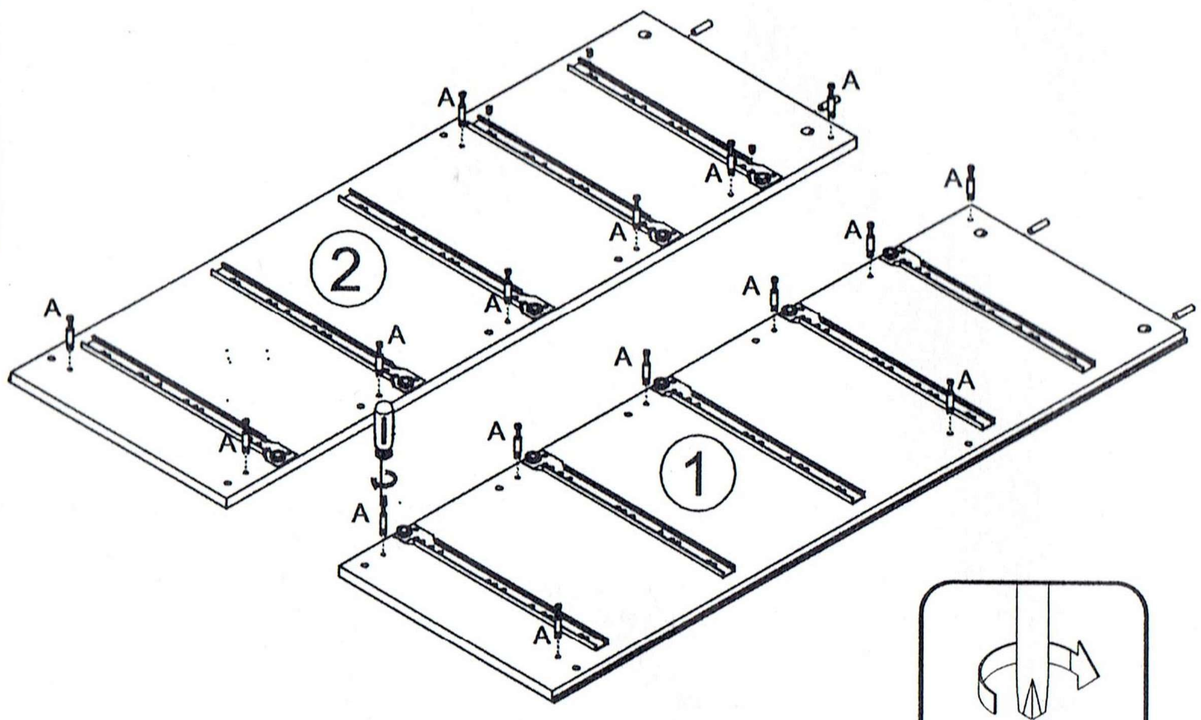
A
2
1

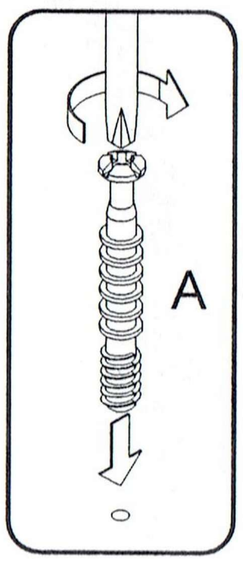
A

3

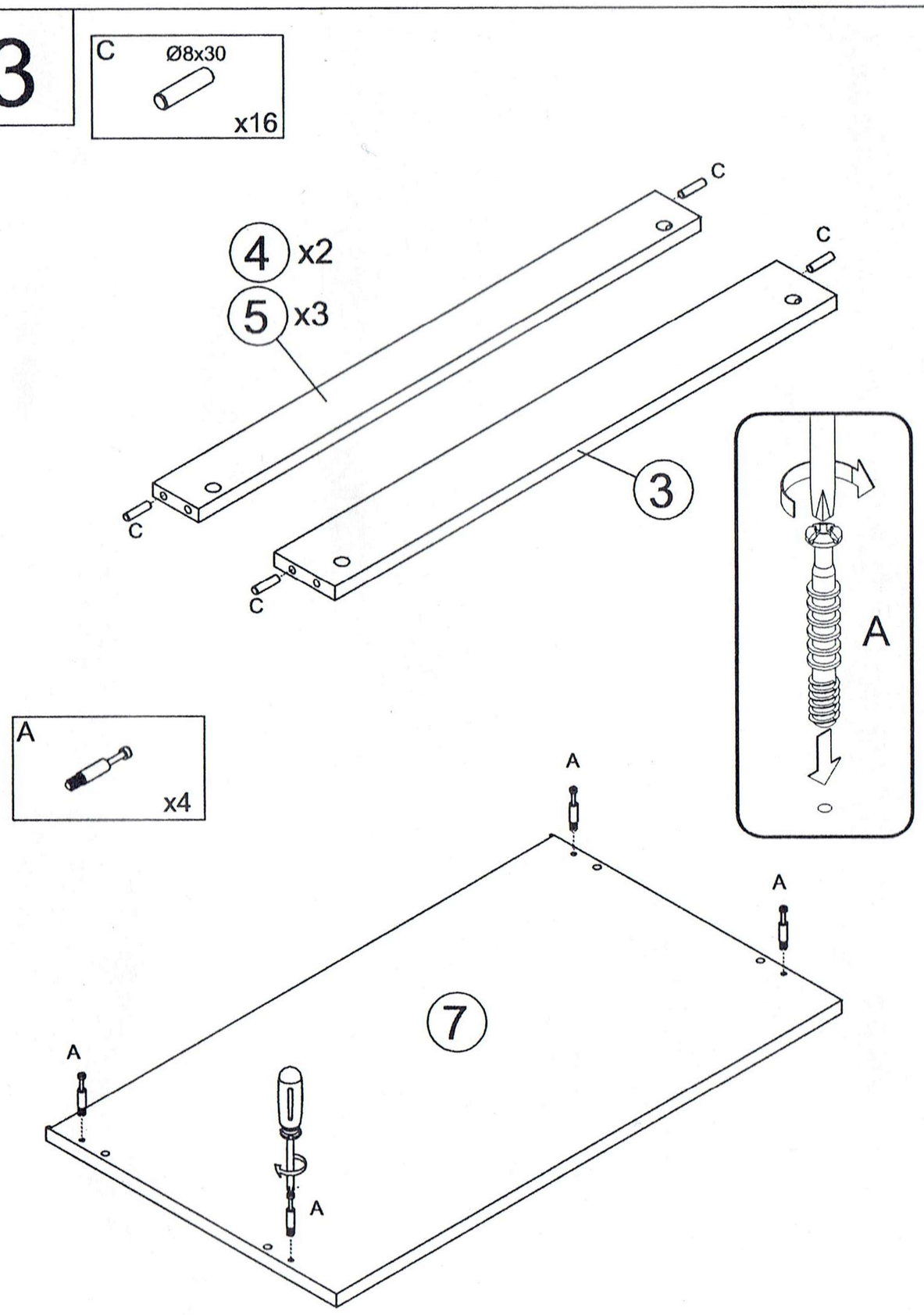
C
Ø8x30
x16
4 x2
5 x3
3
C
A
x4
7
A

4

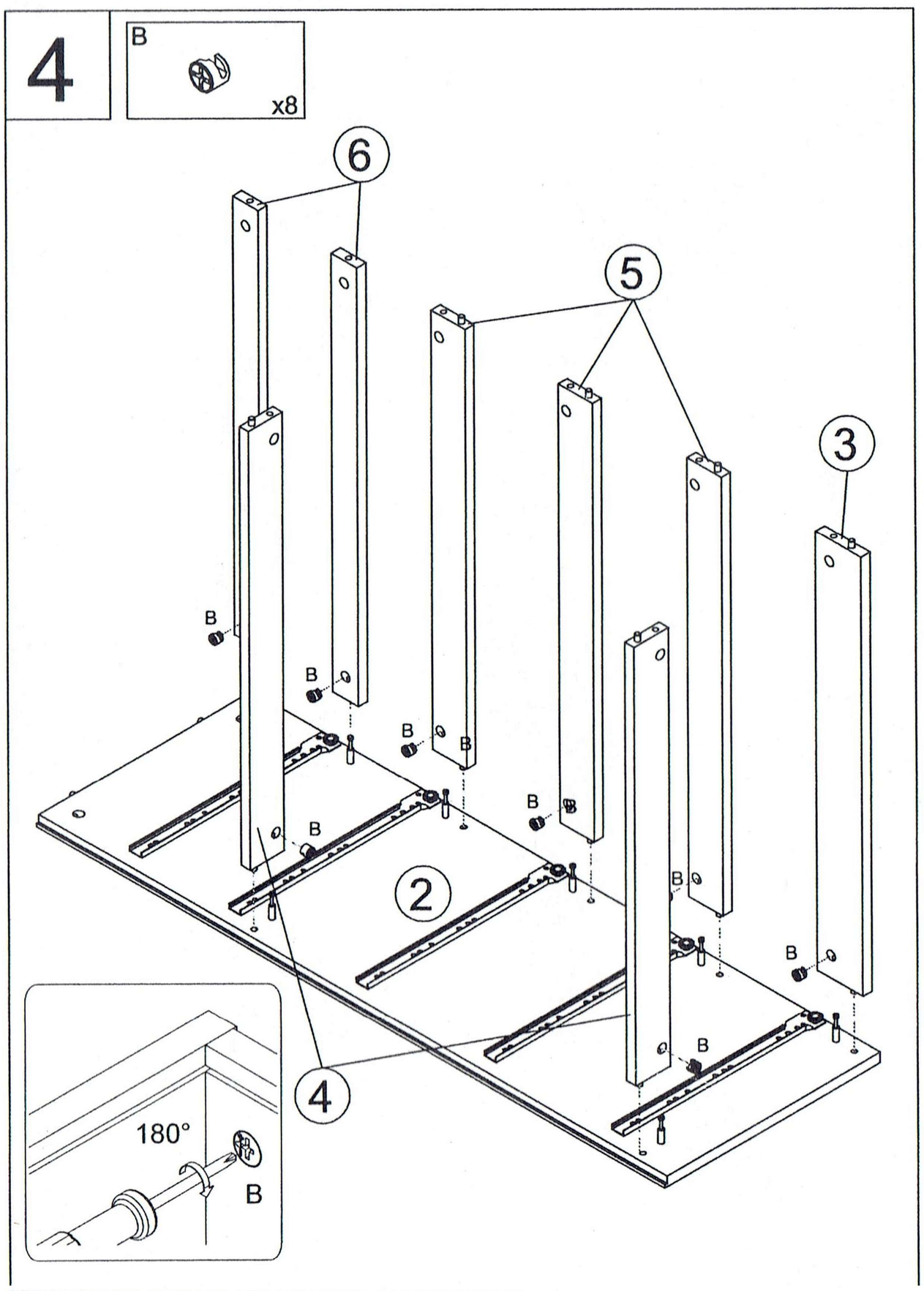
B
x8
6
5
3
2
4
180°
B

5

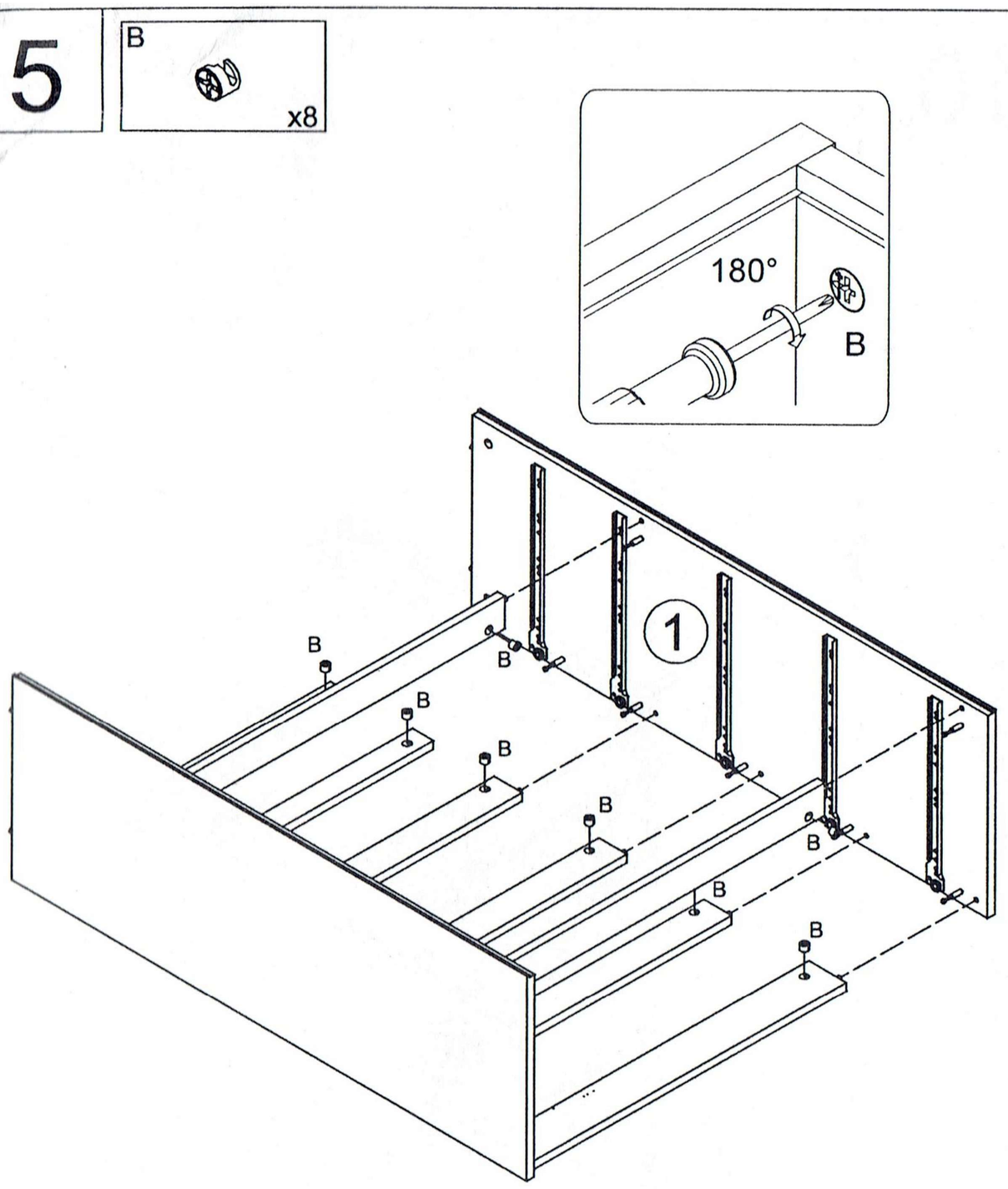
B
x8
180°
B
1

6

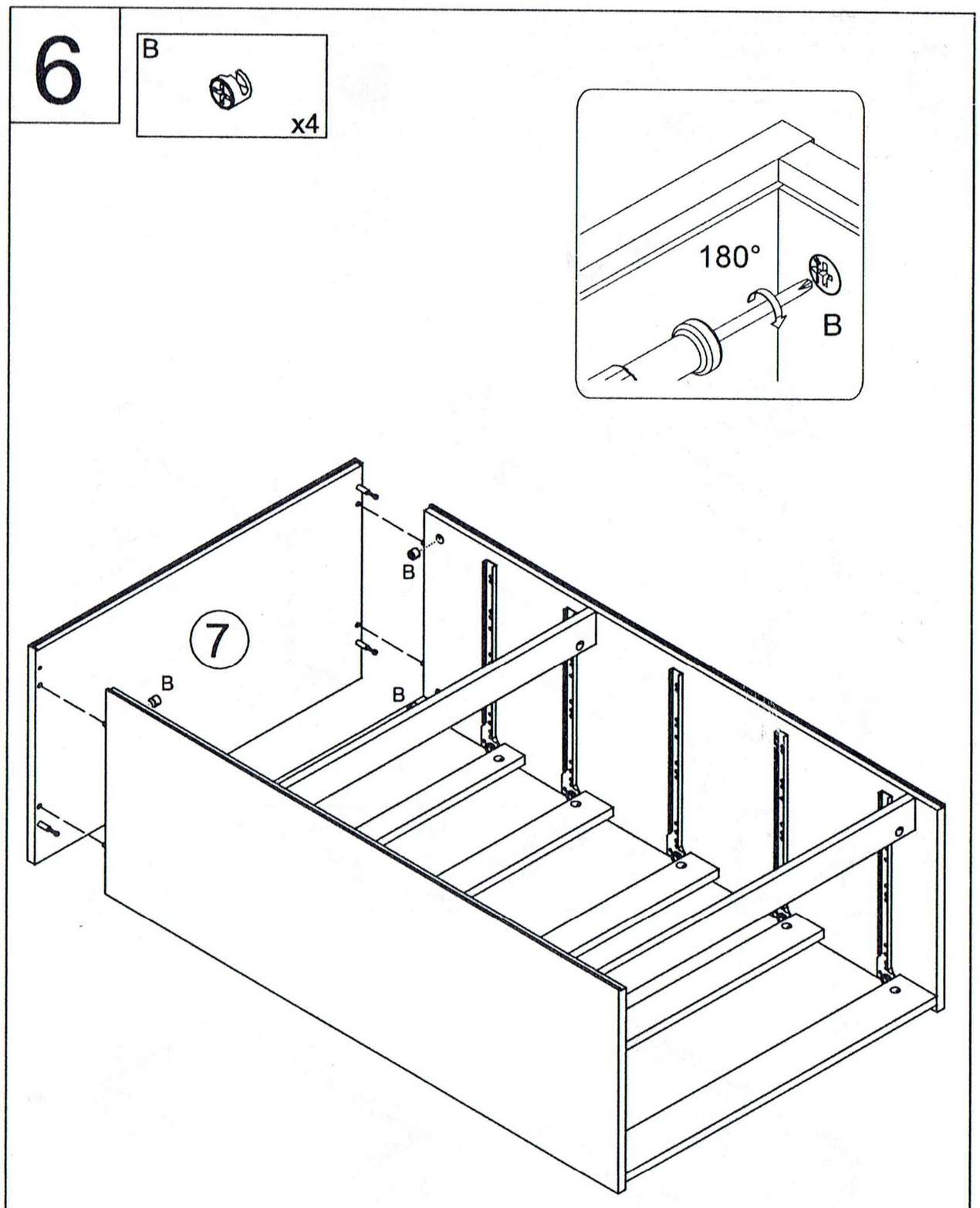
B
x4
180°
B
7

7

T x35

H x4

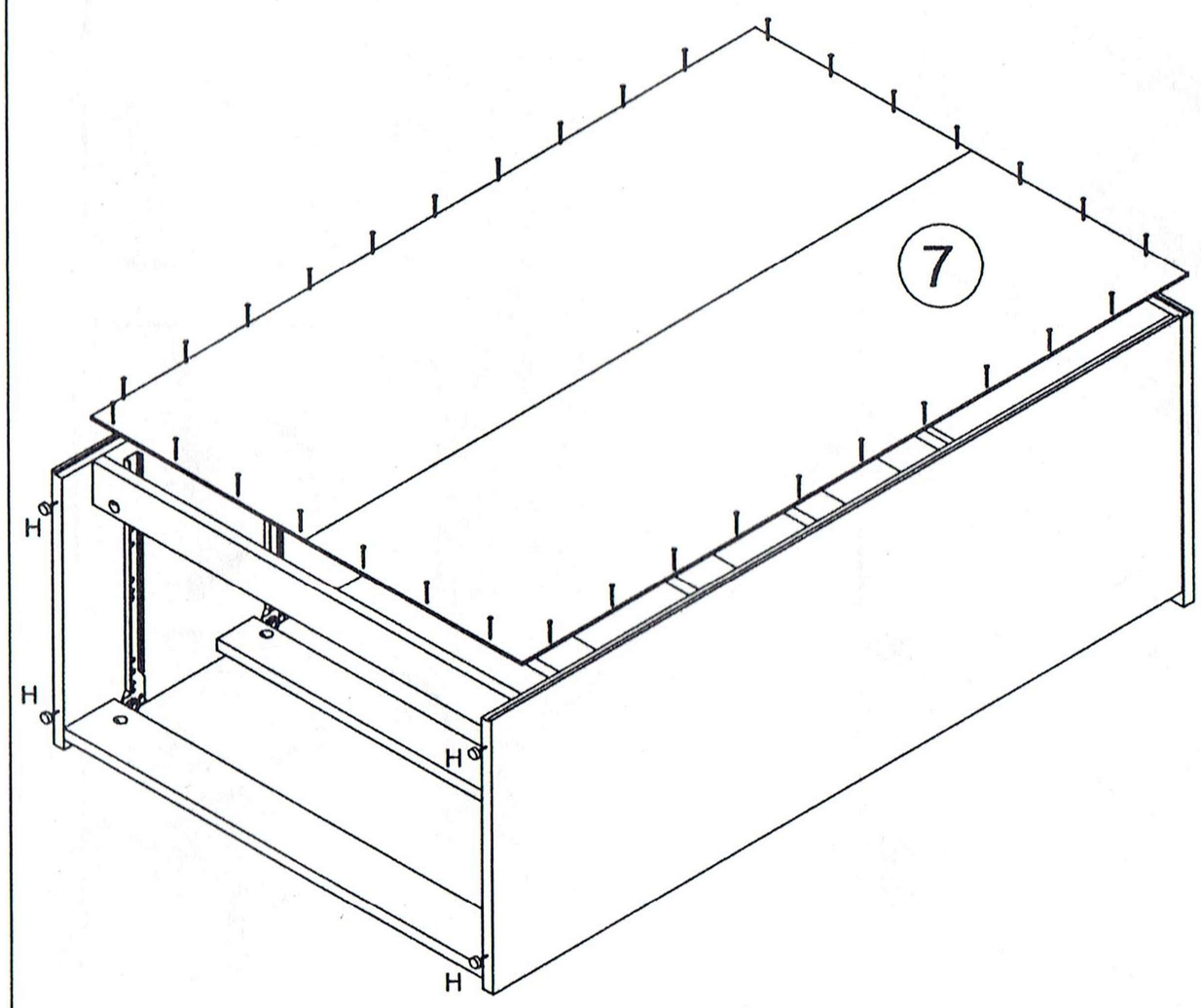

8

C Ø8x30 x8

A x4

B x4

F 4,0x35 x4

x2

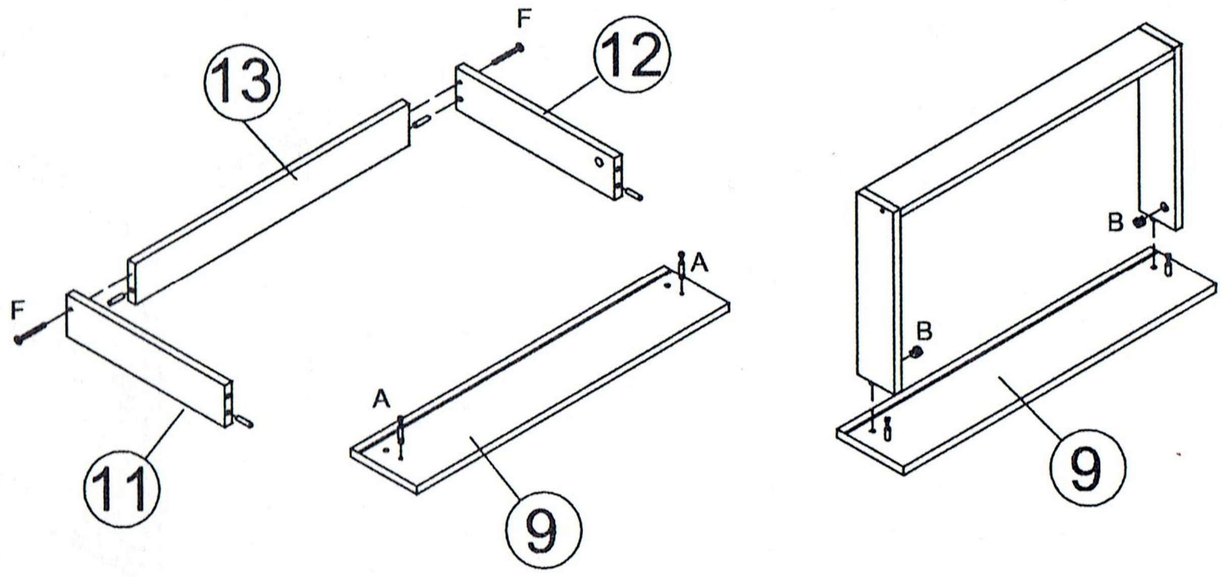

J x14

D x2

G 3,5x15 x8

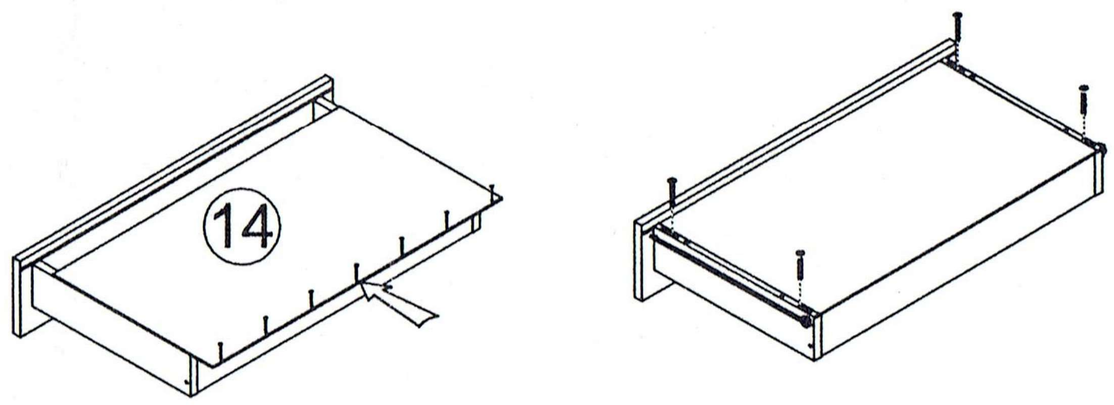

9

C Ø8x30 x24

A x6

B x6

F 4,0x35 x6

x3

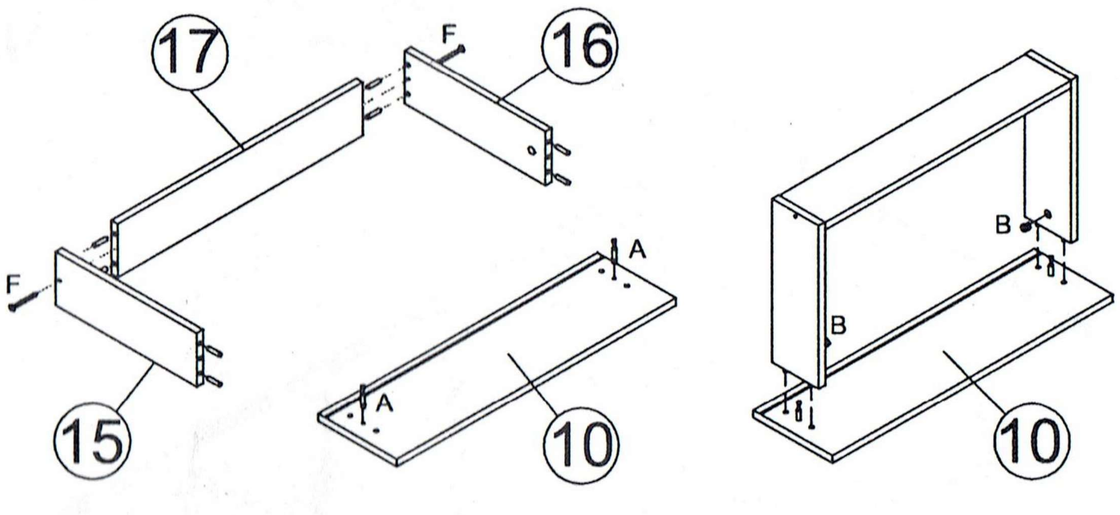

J x28

D x4

G 3,5x15 x16

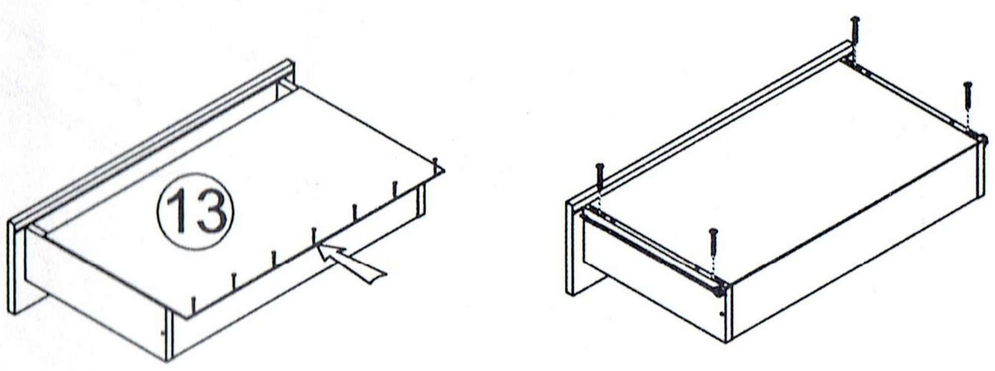
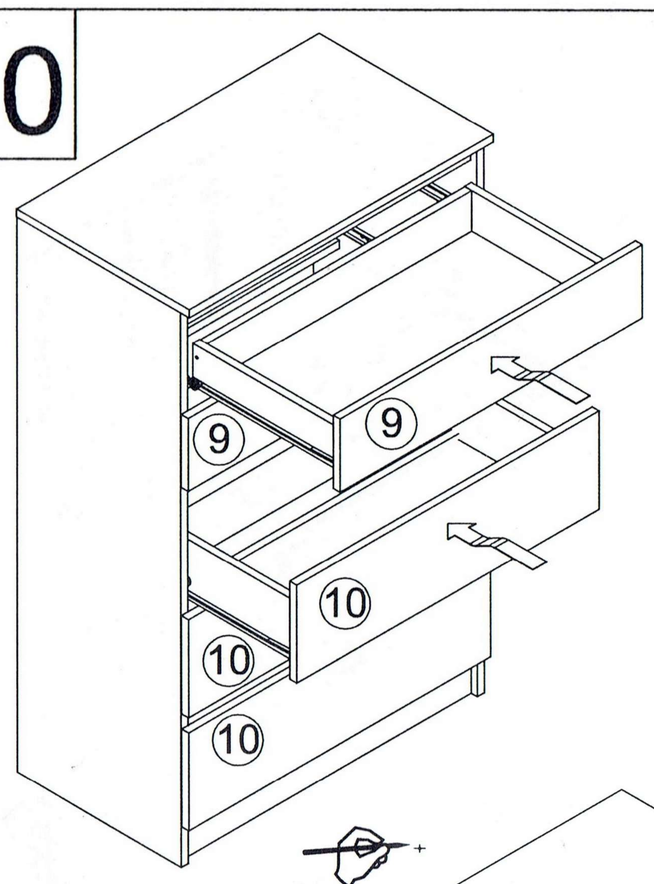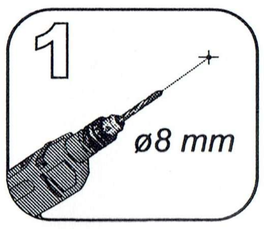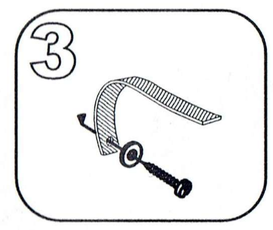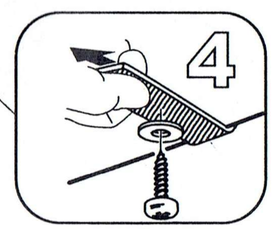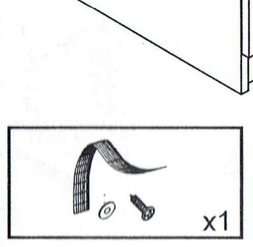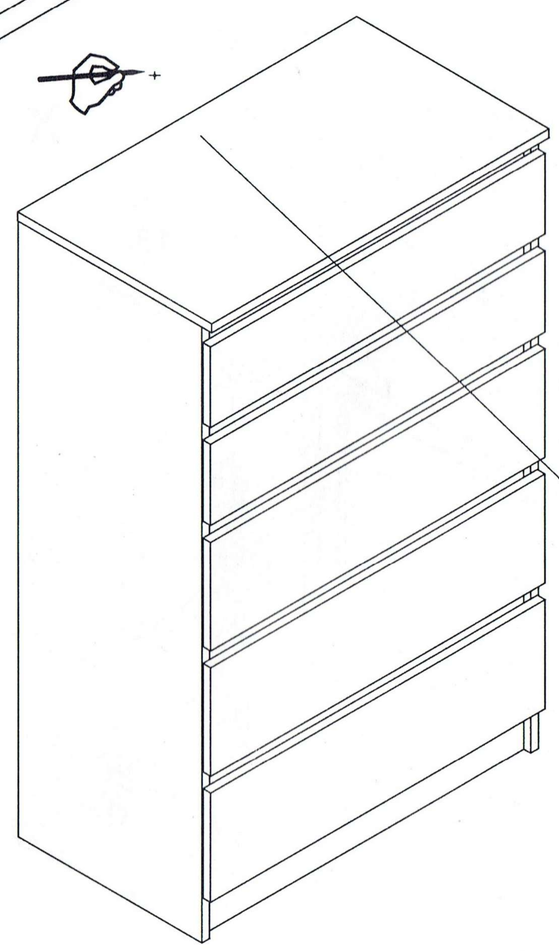
10