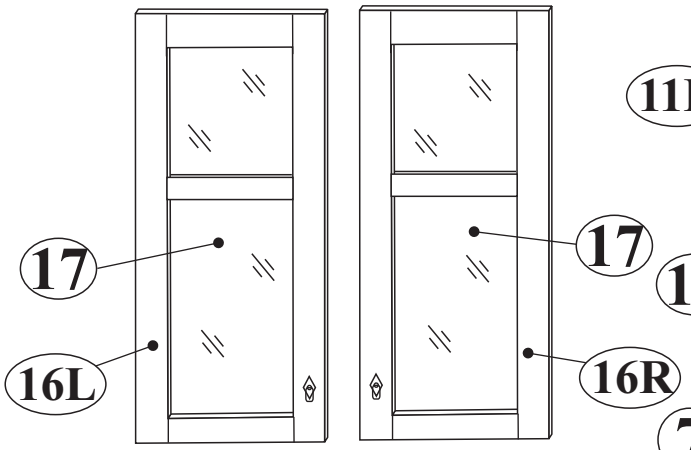
17
17
16L
16R

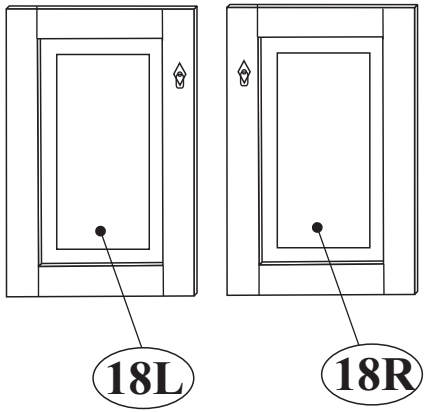
18L
18R

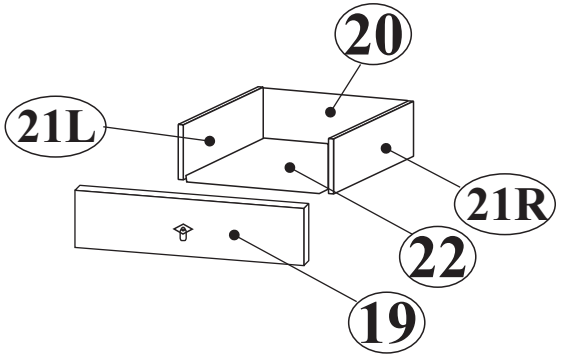
20
21L
21R
22
19

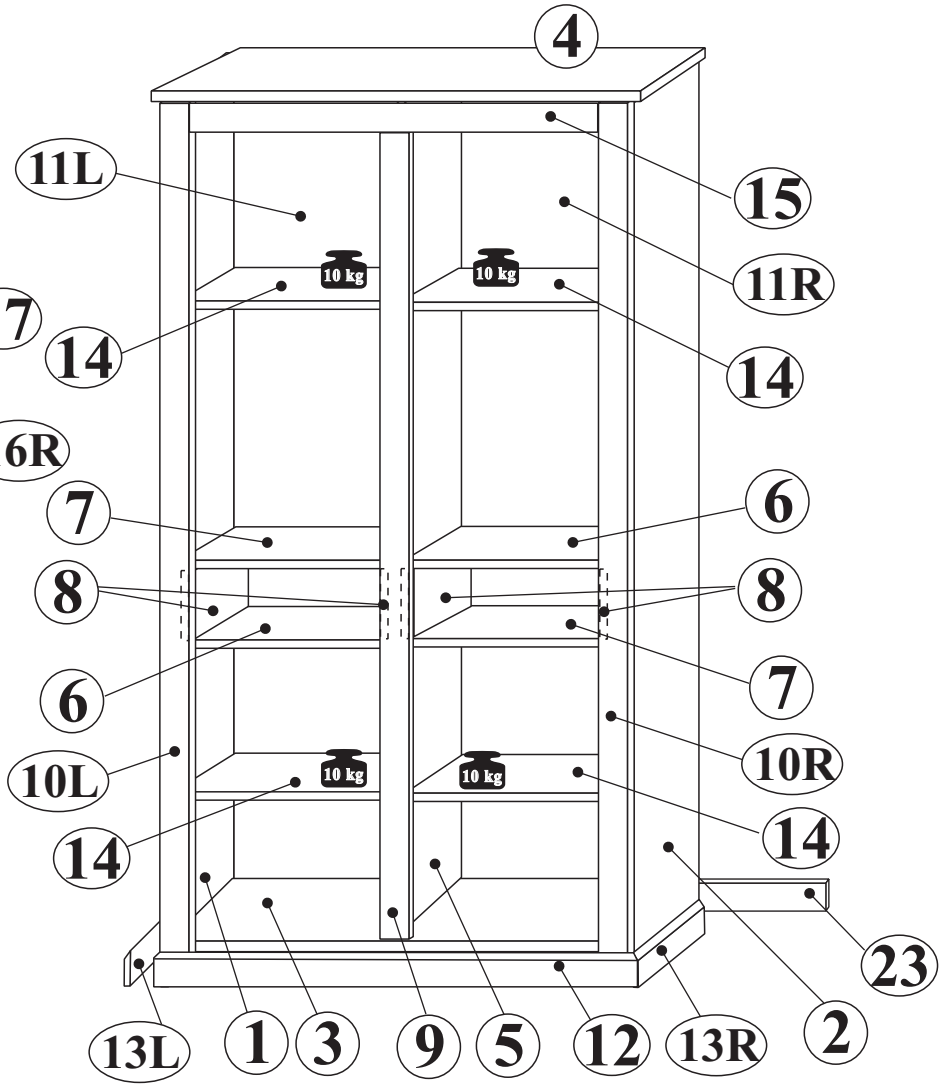
4
11L
15
11R
14
14
10 kg
10 kg
7
6
8
8
6
7
10L
10R
14
14
10 kg
10 kg
23
13L
1
3
9
5
12
13R
2

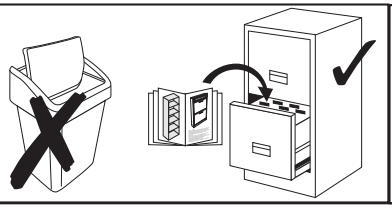

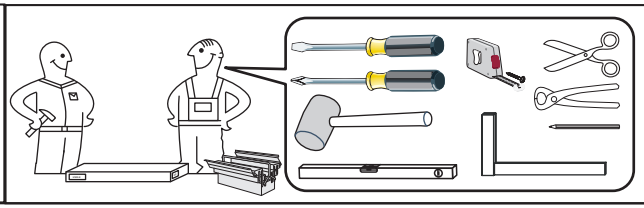

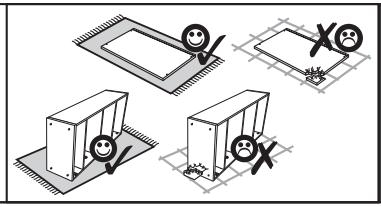

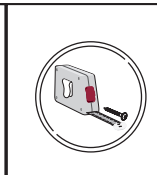

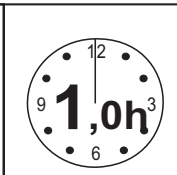
1,0h

NR 1

- B1 — ϕ 8x28 — x44
- M1 — x33
- T1 — x25
- B2 — ϕ 8x50 — x4
- T12 — x4
- C2 — x29
- W1 — x20
- J23 — x22
- F1 — x8
- S4 — 3,0x20 — x14
- L1 — x1

NR 2

- F33 — x14
- P13 — 3,5x13 — x56+16
- F12 — x4
- G5 — x20
- S4 — 3,0x20 — x20
- S5 — 4,0x25 — x4
- S6 — 4,0x30 — x2

NR 3

- Y0 — x10
- Z5 — x4
- D7 — x10
- E3 — 6,3x13 — x20
- S8 — 4x13 — x20

NR 4

- R33 — x2L/2R
- E24 — 6,0x11 — x8
- P7 — 4x30 — x8
- T2 — 5x35mm — x4
- M2 — 12x10mm — x4

NR 5

- U22 — x6
- A18 — 4,0x25 — x6

NR 6

- J11 — x1
- P13 — 3,5x13 — x2

1

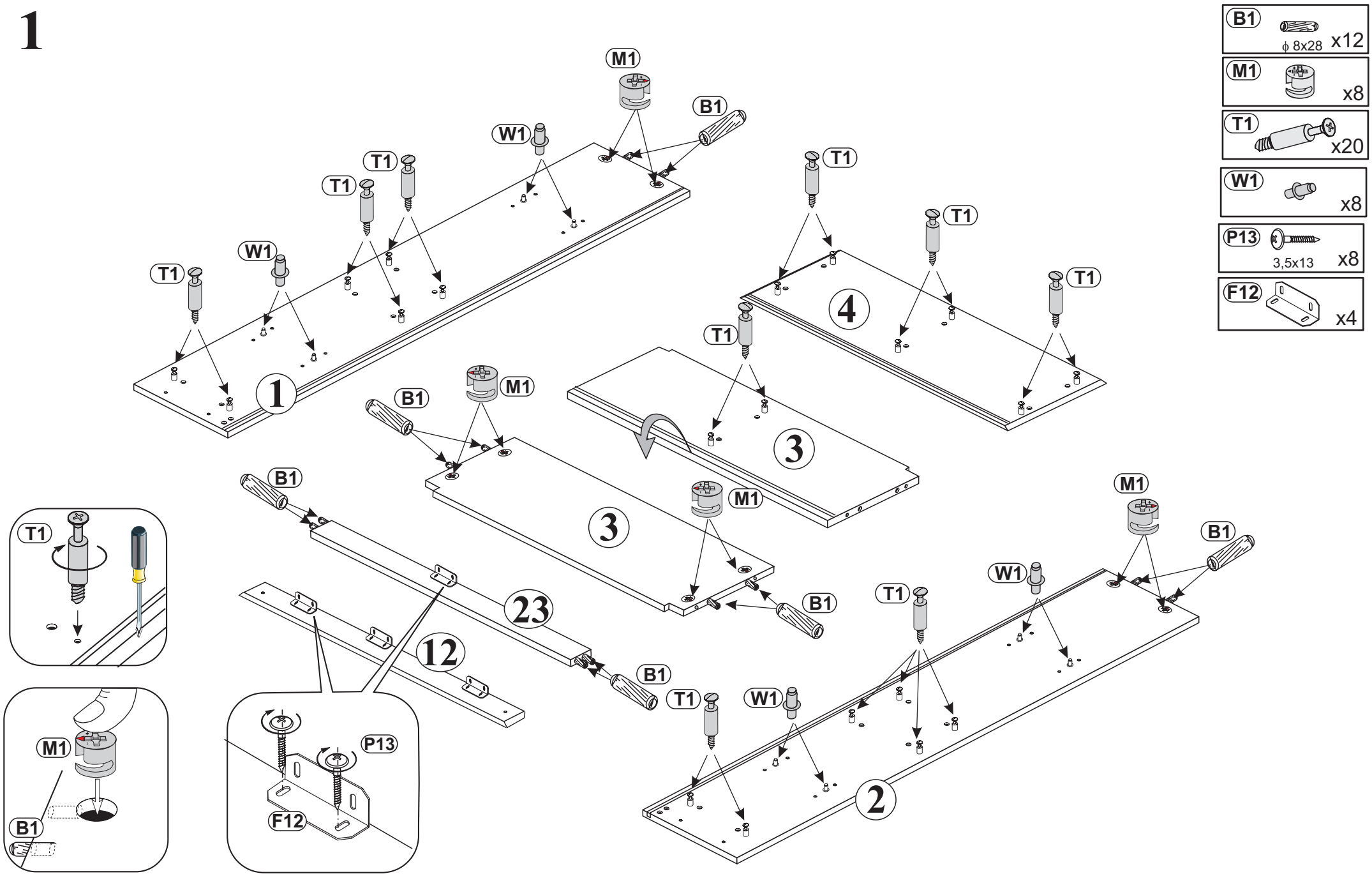
B1
ϕ 8x28
x12
M1
x8
T1
x20
W1
x8
P13
3,5x13
x8
F12
x4
M1
B1
W1
T1
T1
T1
W1
T1
1
T1
T1
T1
4
T1
M1
B1
3
B1
M1
3
M1
B1
23
12
B1
T1
W1
T1
W1
M1
B1
2
T1
M1
B1
P13
F12

2

D7	x10	B1 ϕ 8x28	x24
E3 6,3x13	x20	M1	x9
P13 3,5x13	x28	T1	x5
F33	x14	W1	x8

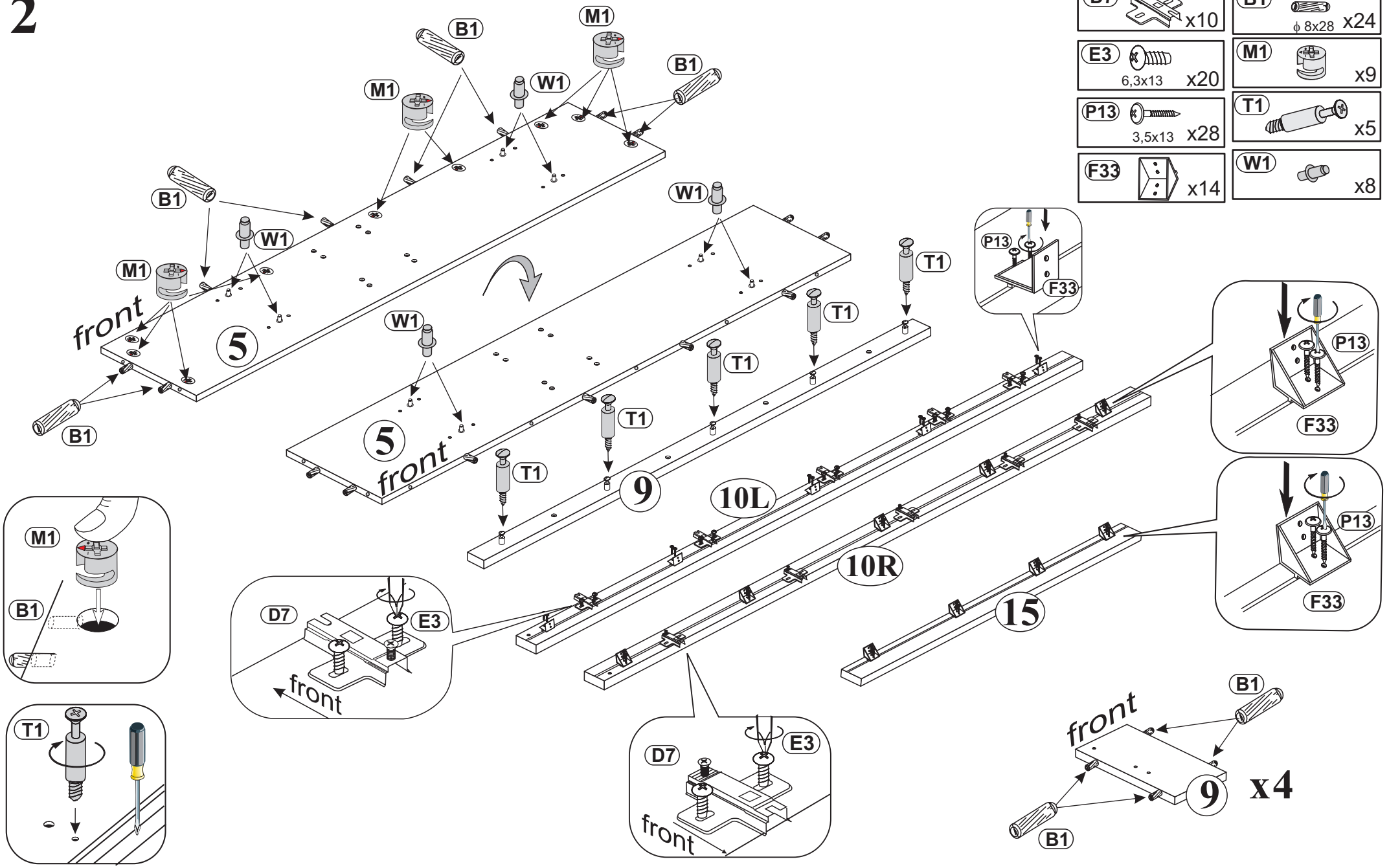

3

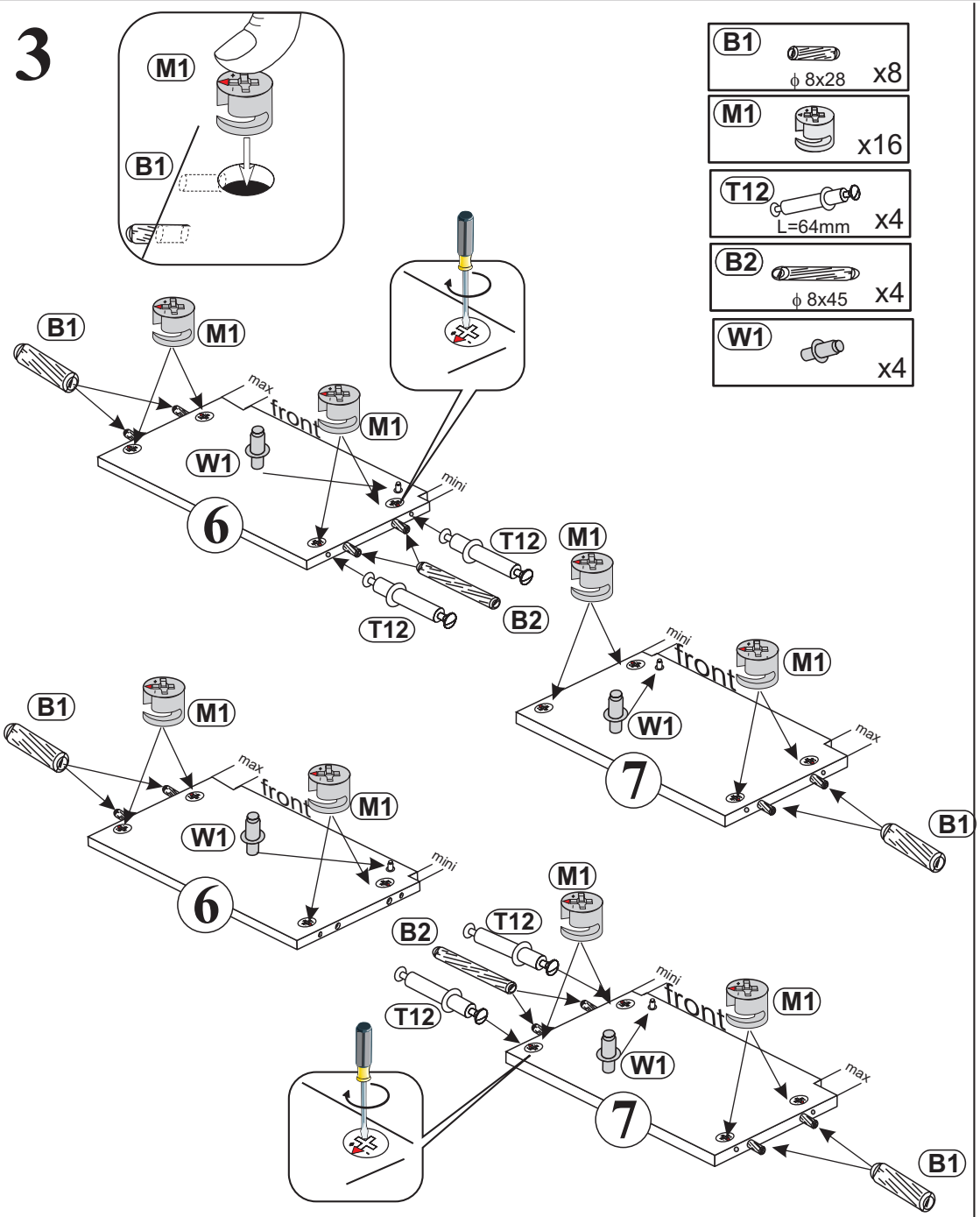
M1
B1
B1 ϕ 8x28 x8
M1 x16
T12 L=64mm x4
B2 ϕ 8x45 x4
W1 x4
max
front
mini
W1
T12
B2
6
7

4

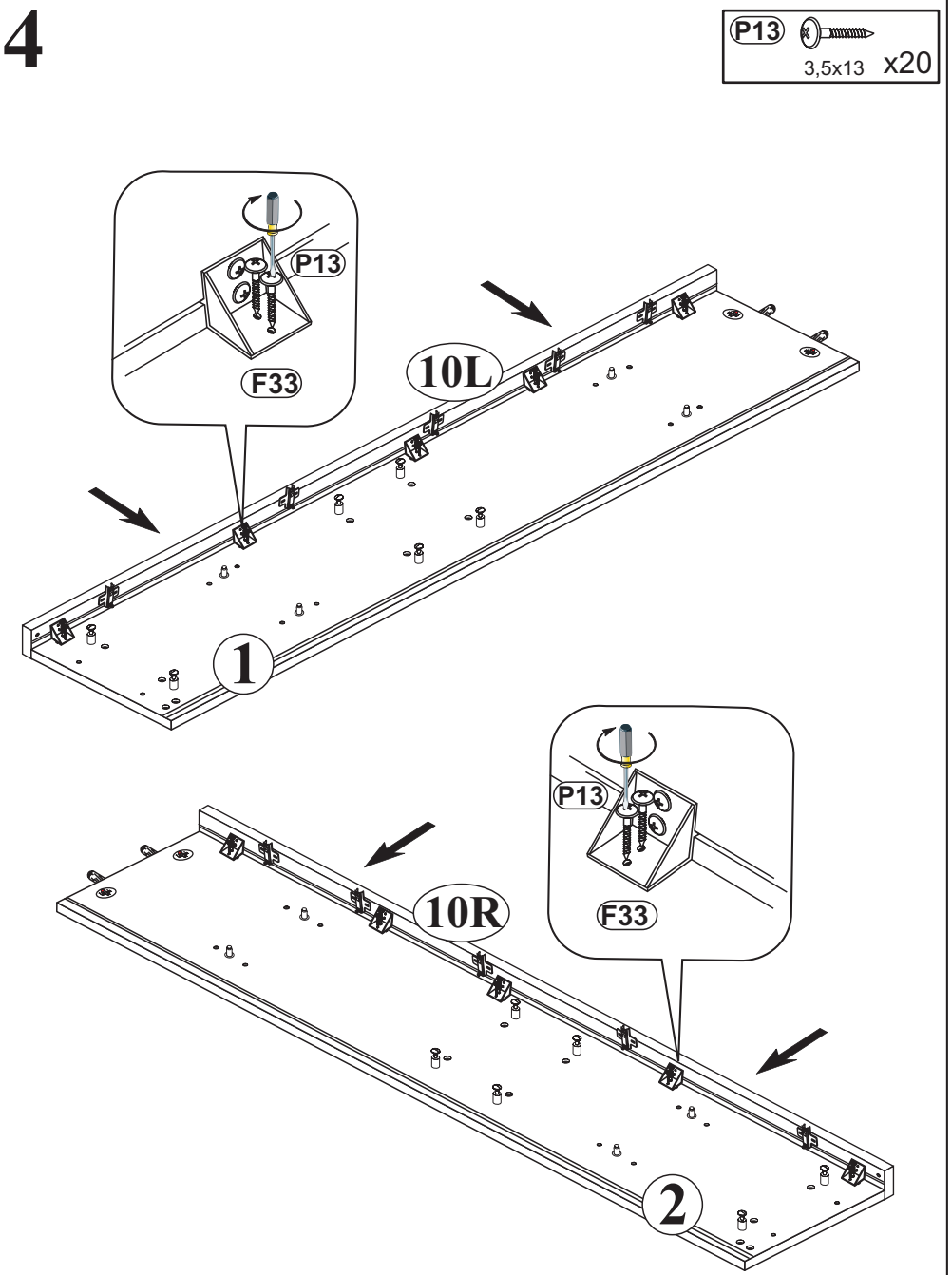
P13 3,5x13 x20
P13
F33
10L
1
10R
2

5

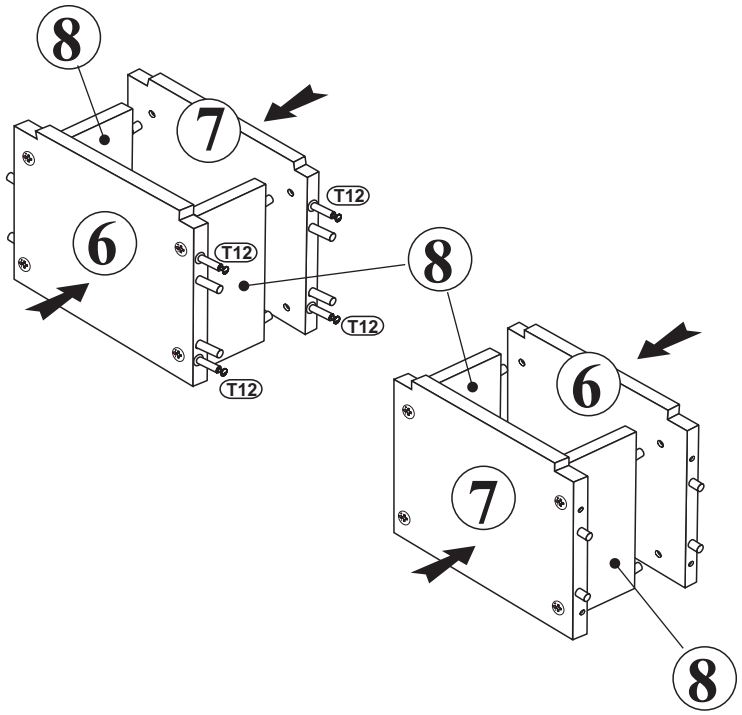

6

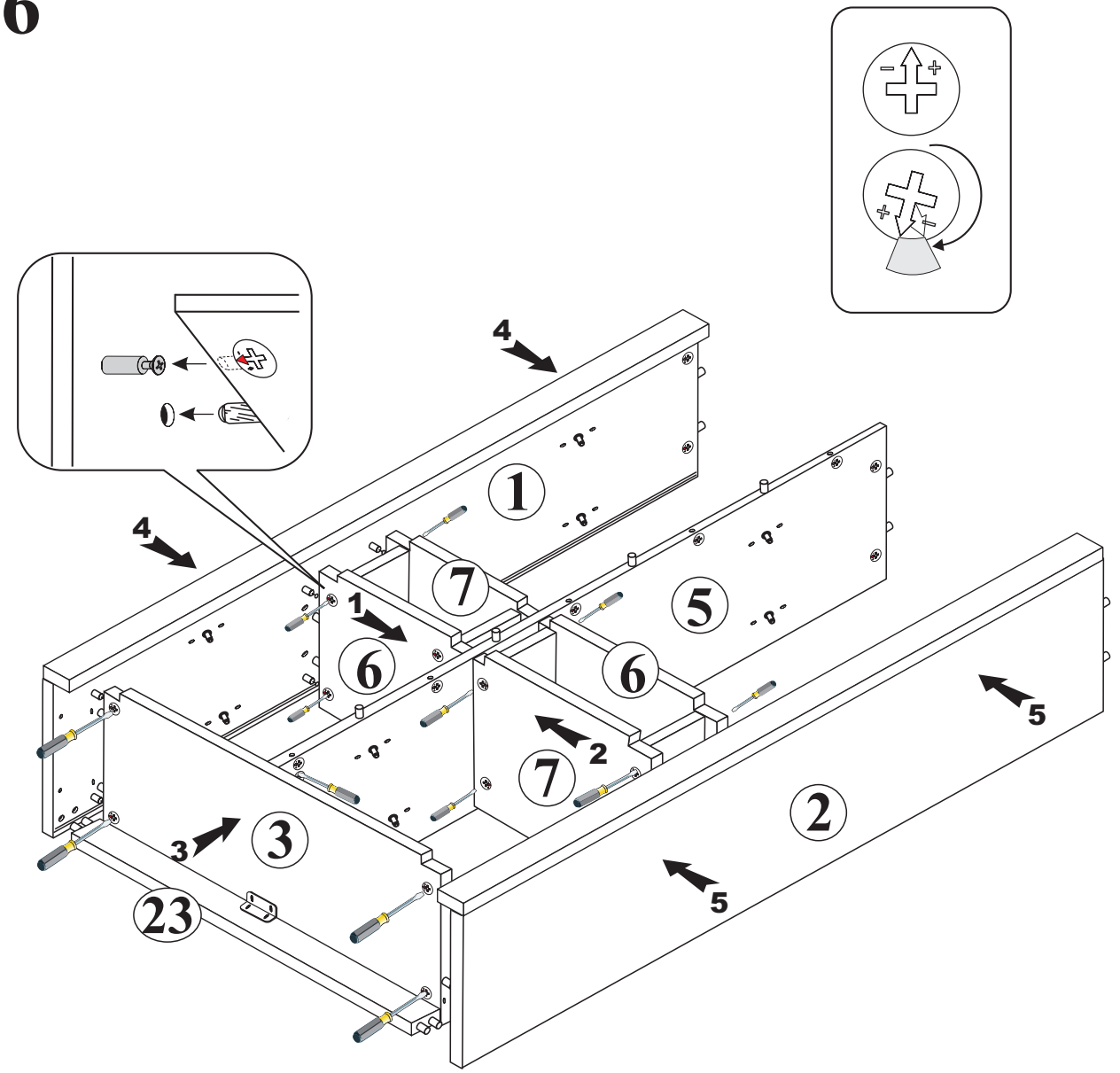

7

S5 4,0x25 x4

P13 3,5x13 x8

S6 4,0x30 x2

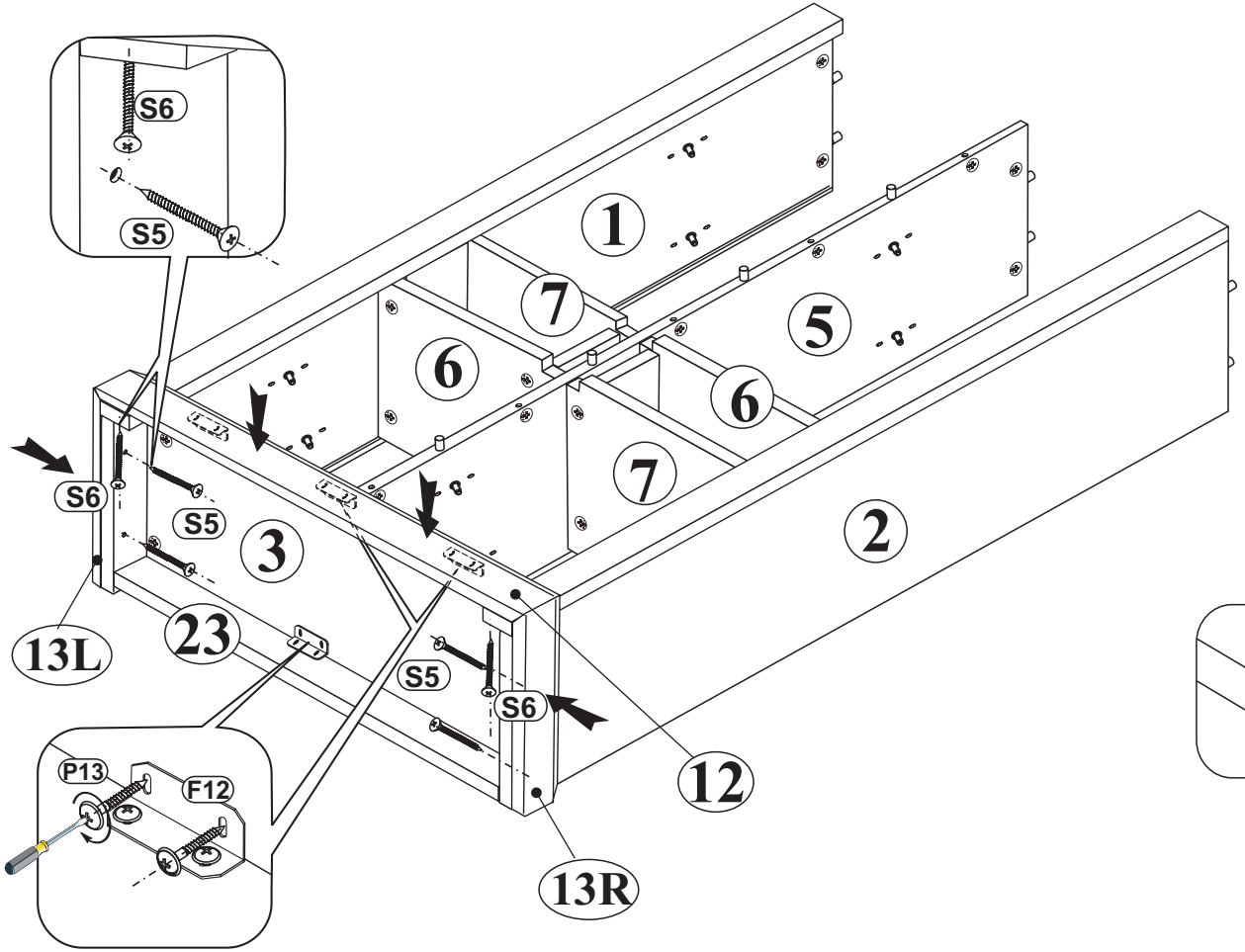

8

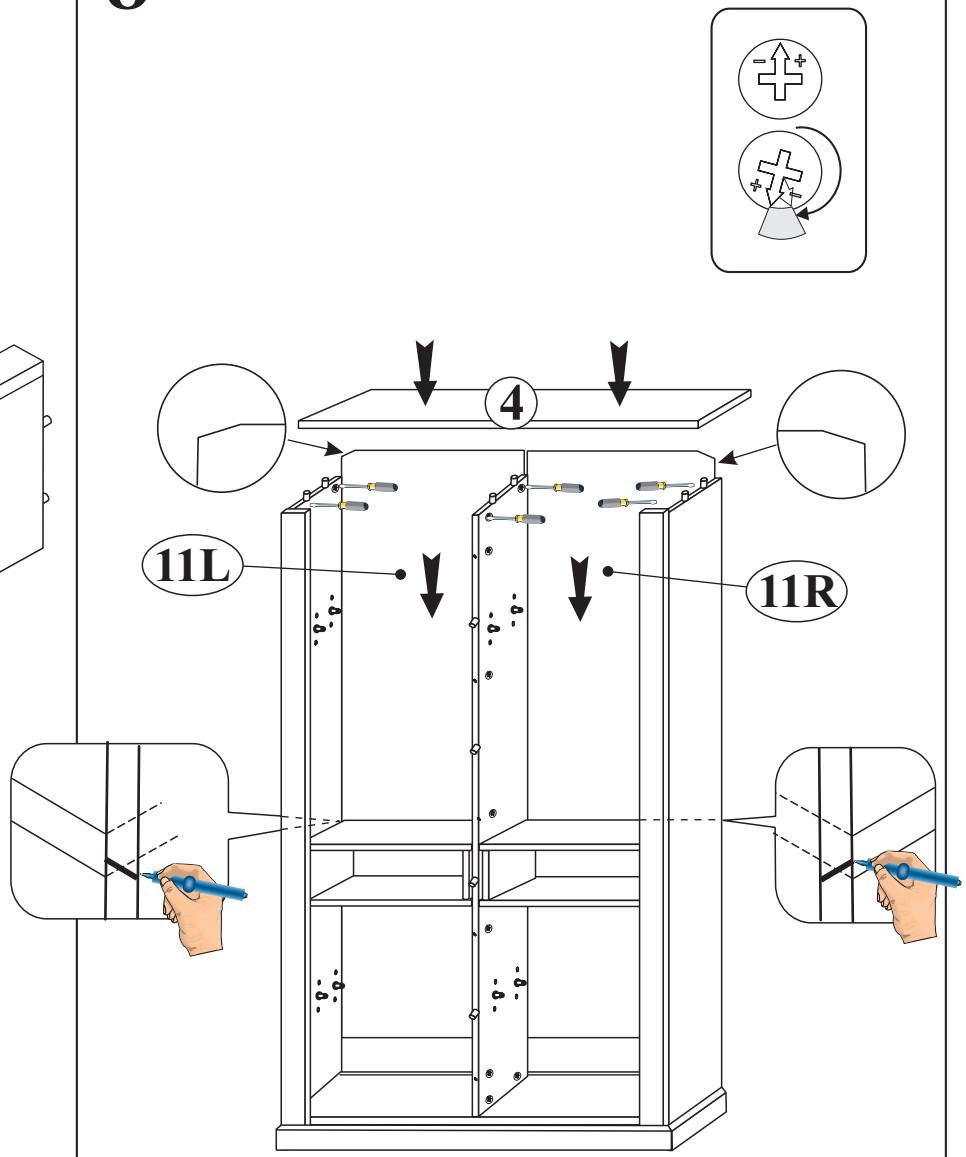

9

S4 3x20 x14

F1 x8

J23 x18

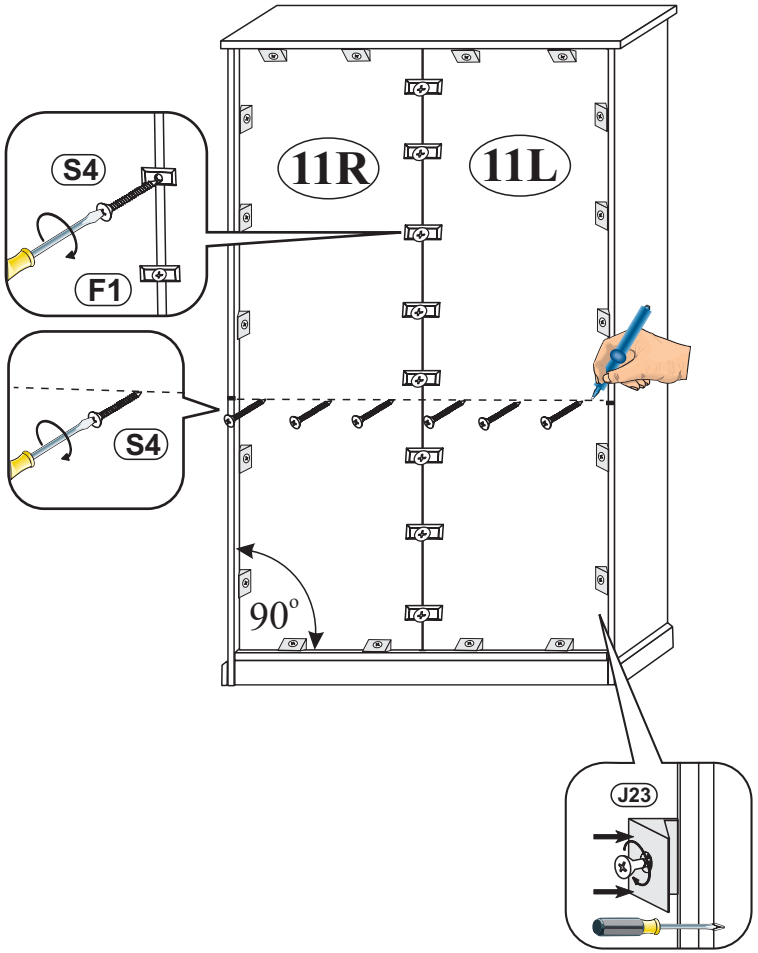

10

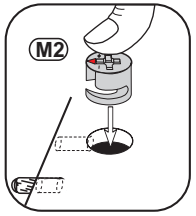

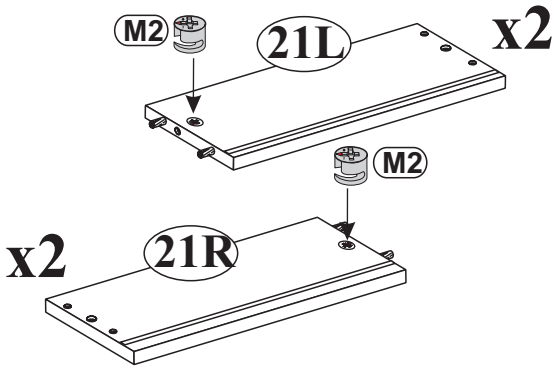

U22 x2

T2 x4

A18 4,0x25 x2

M2 x4

J23 x4

P7 4x30 x8

L1 x1

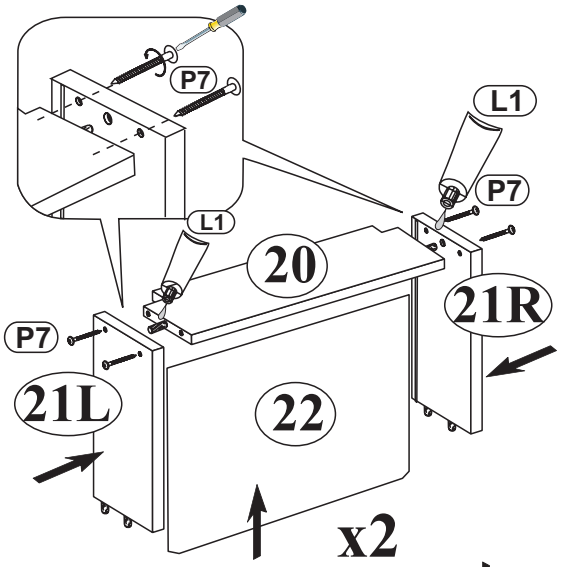

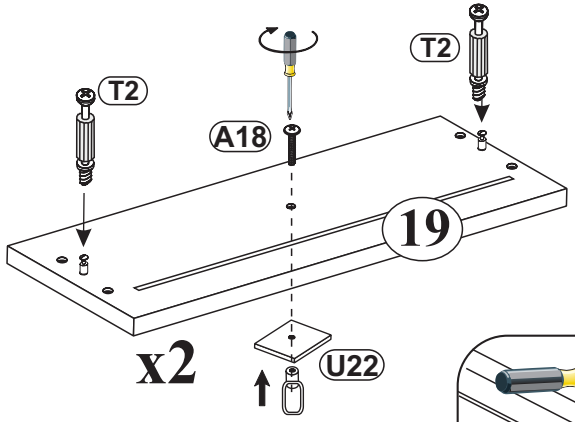

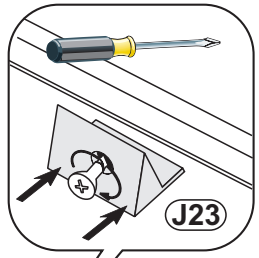

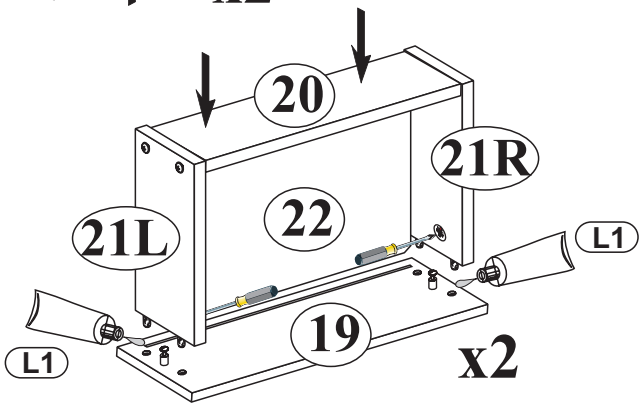

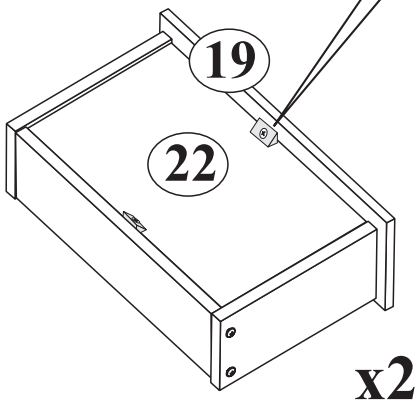

11

U22 x2

S8 4x13 x8

Y0 x4

A18 4,0x25 x2

Z5 x2

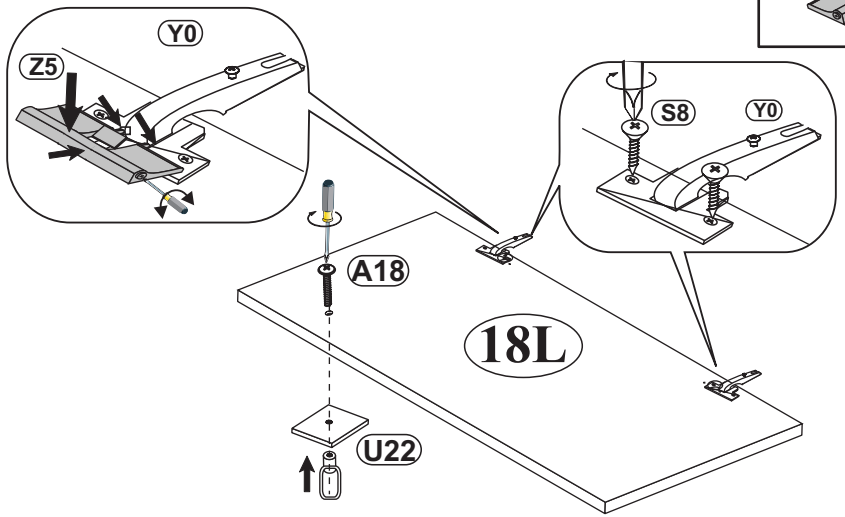

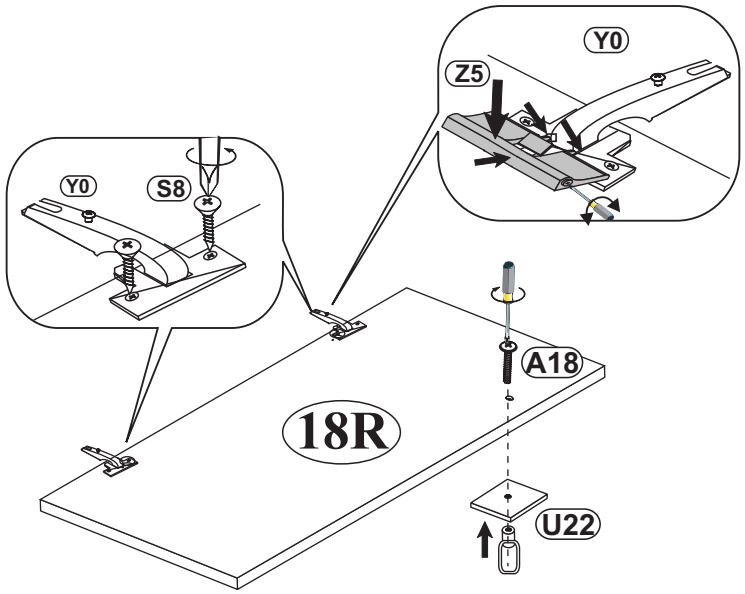

12

S8 4x13 x12

U22 x2

G5 x20

Y0 x6

A18 4,0x25 x2

S4 3,0x20 x20

Z5 x2

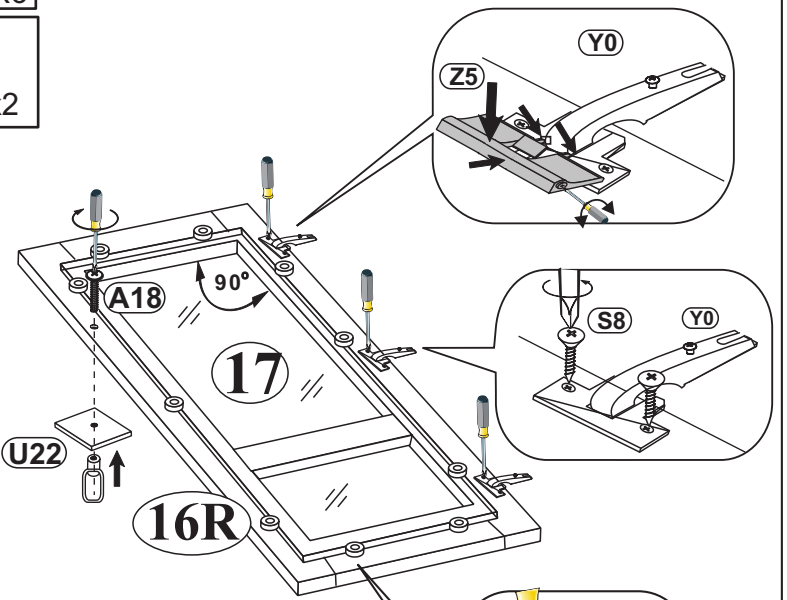

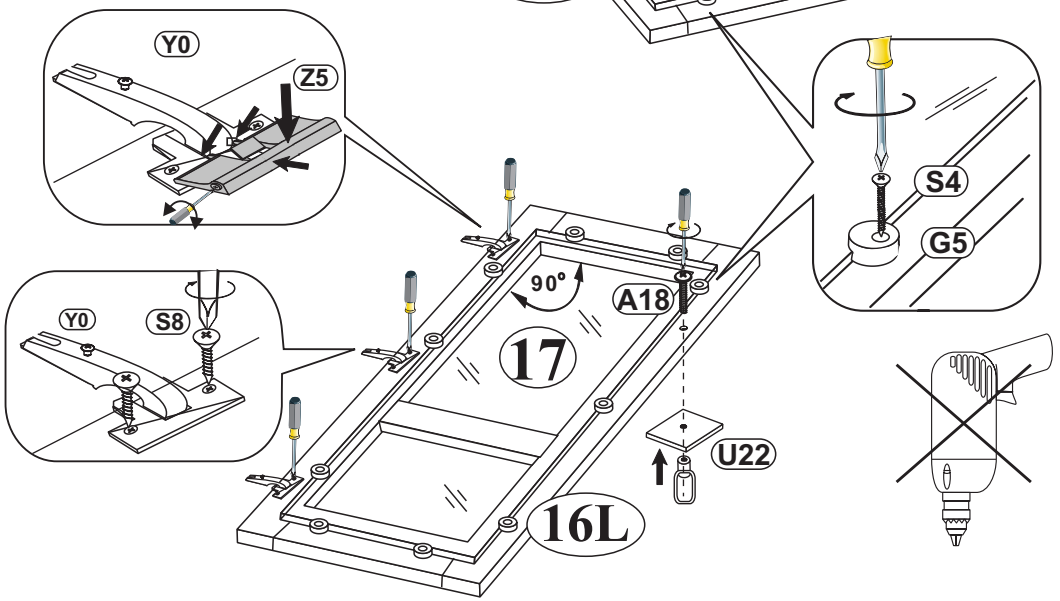

13

P13 3,5x13 x8

C2 x29

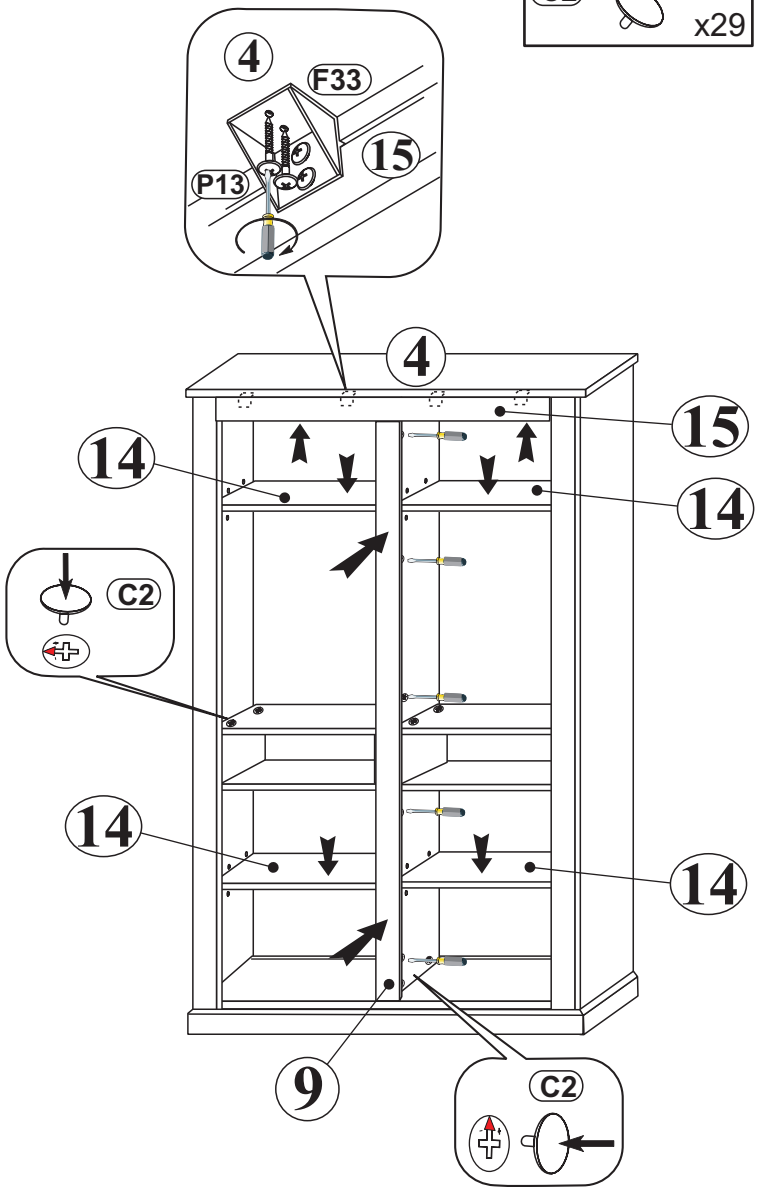

14

R33 x2L/2R

E24 6,0x11 x8

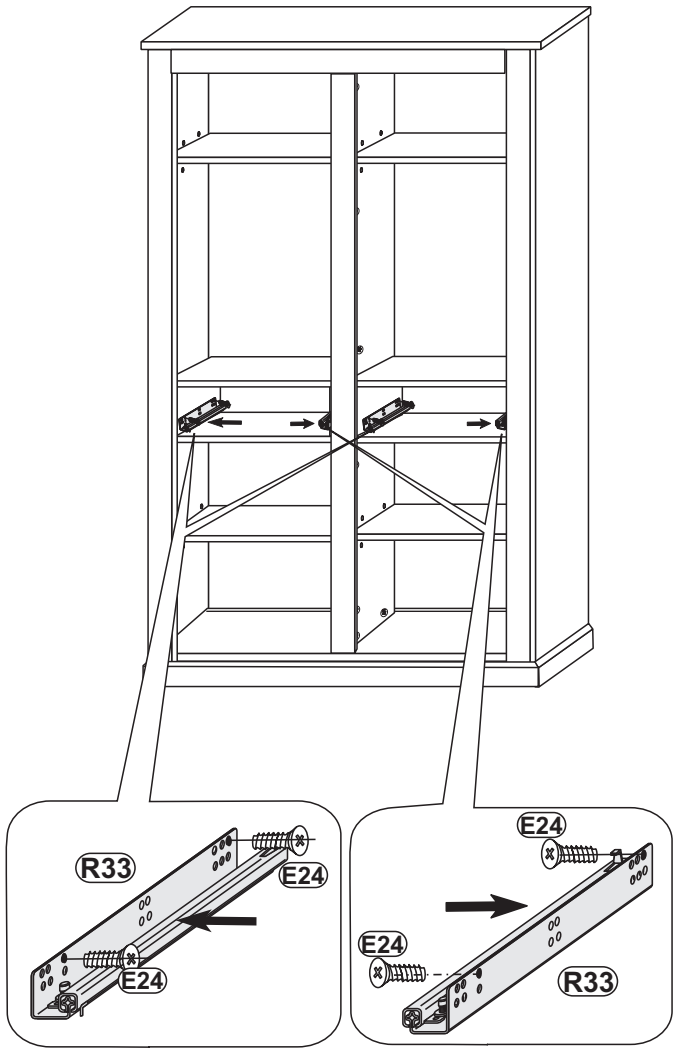

15

J11 x1

P13 3,5x13 x2

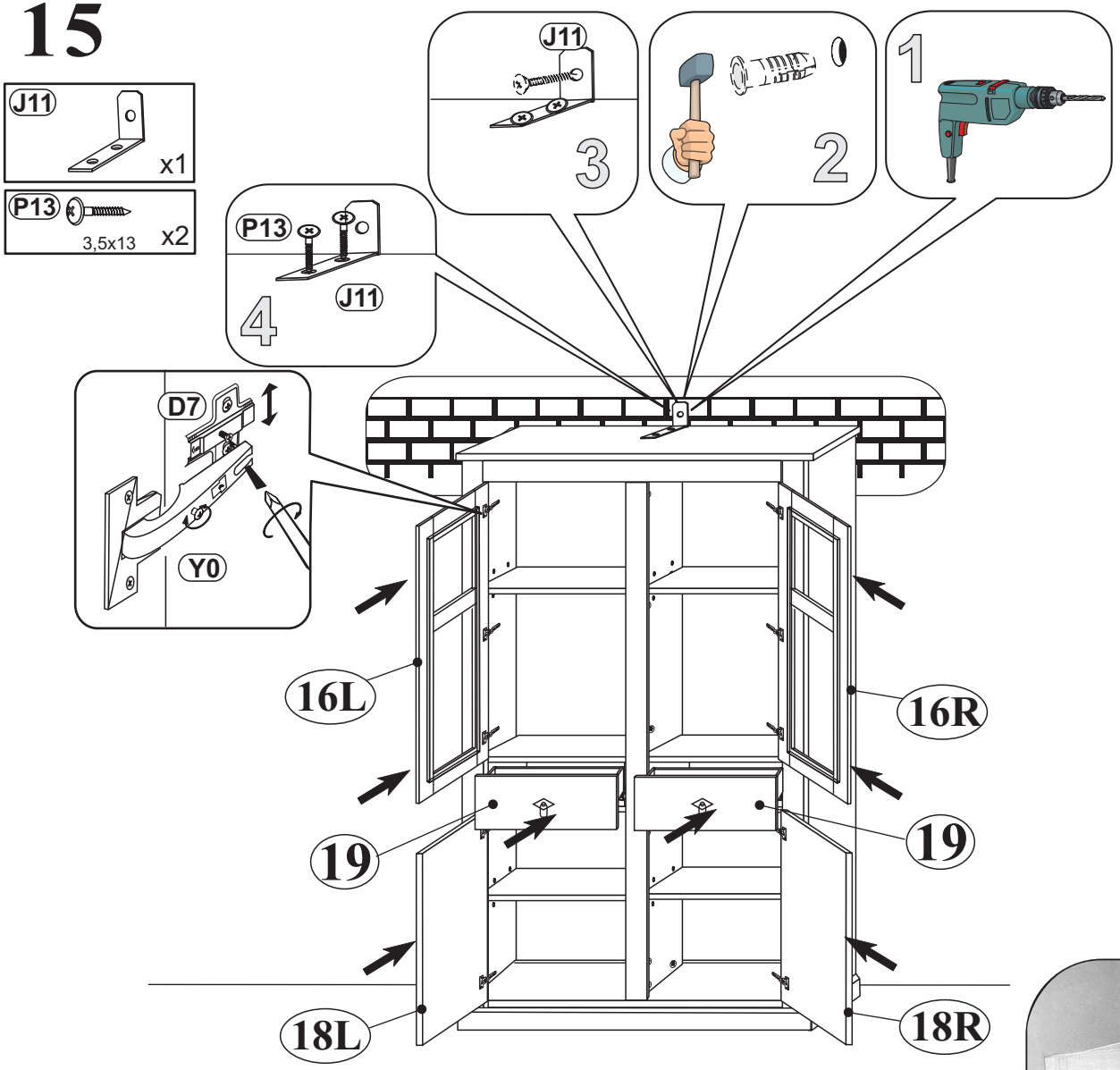

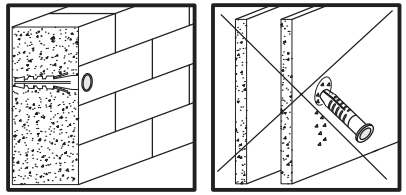

a)

b)
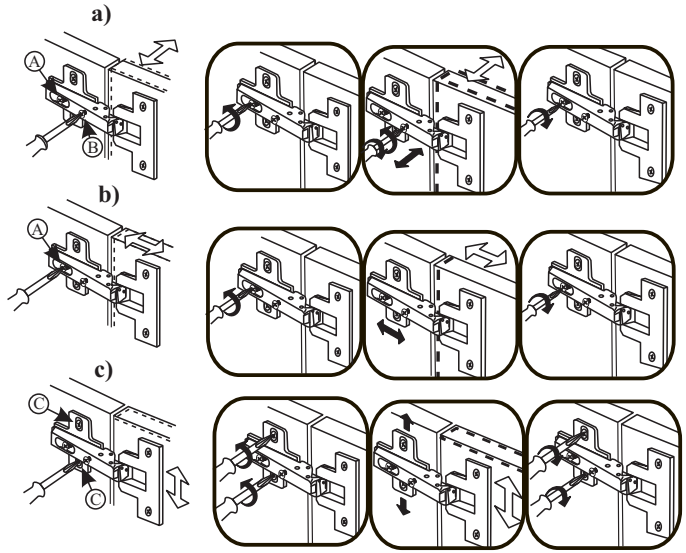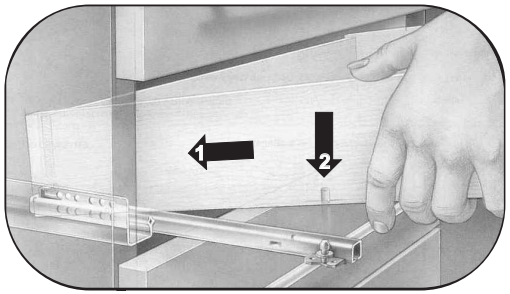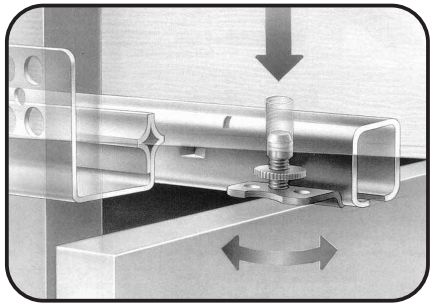
c)